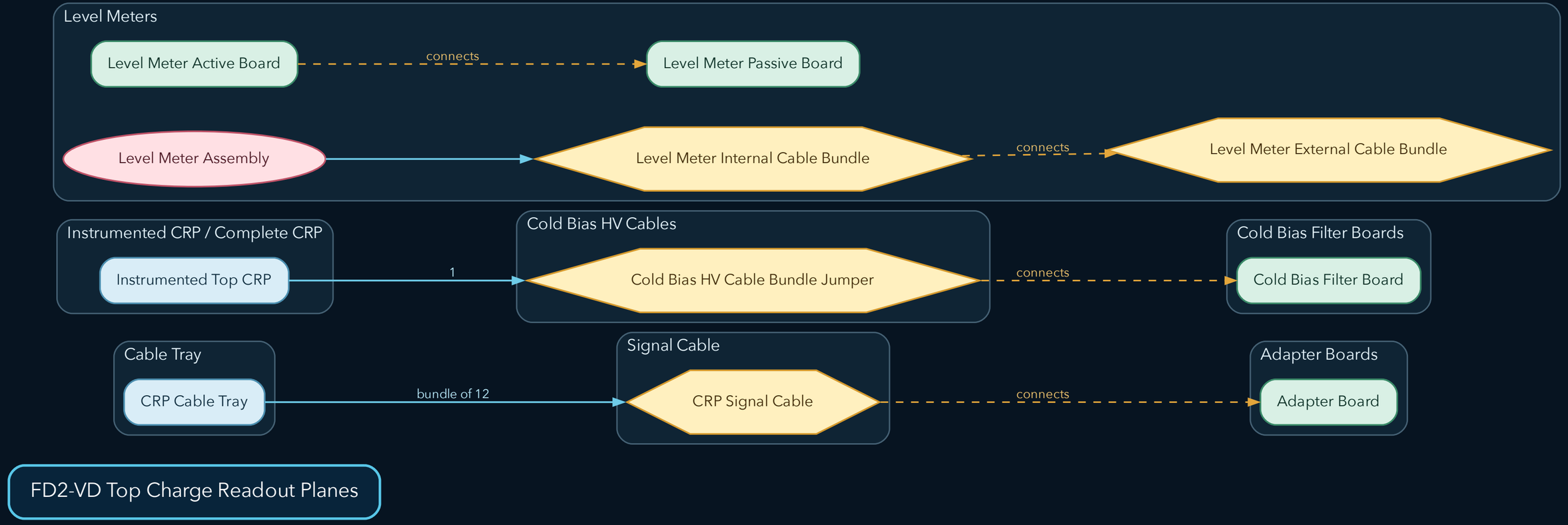FD2-VD Top Charge Readout Planes · Cabling