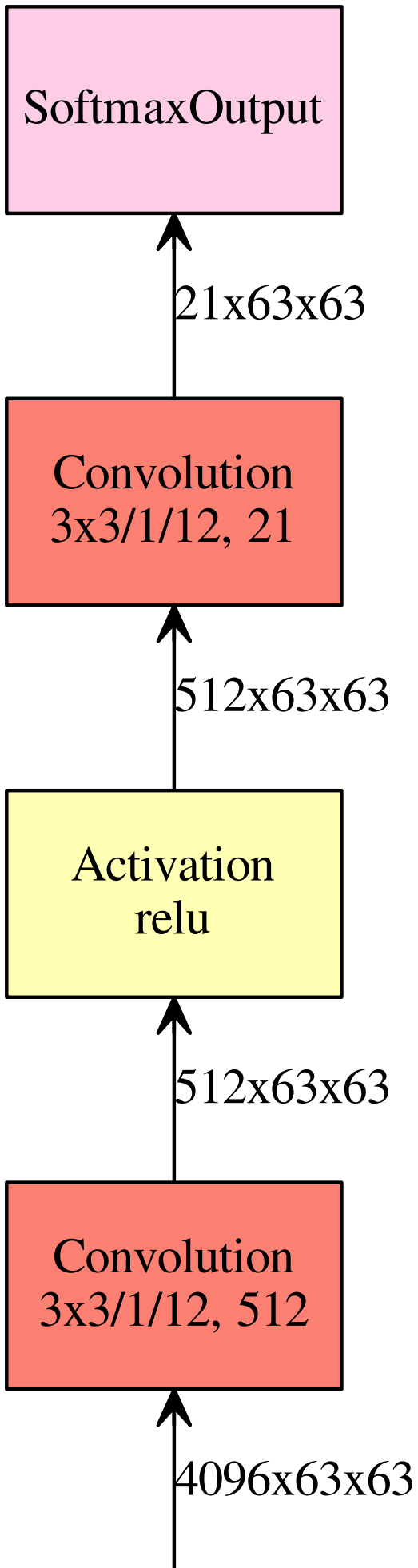
SoftmaxOutput
21x63x63
Convolution
3x3/1/12, 21
512x63x63
Activation
relu
512x63x63
Convolution
3x3/1/12, 512
4096x63x63

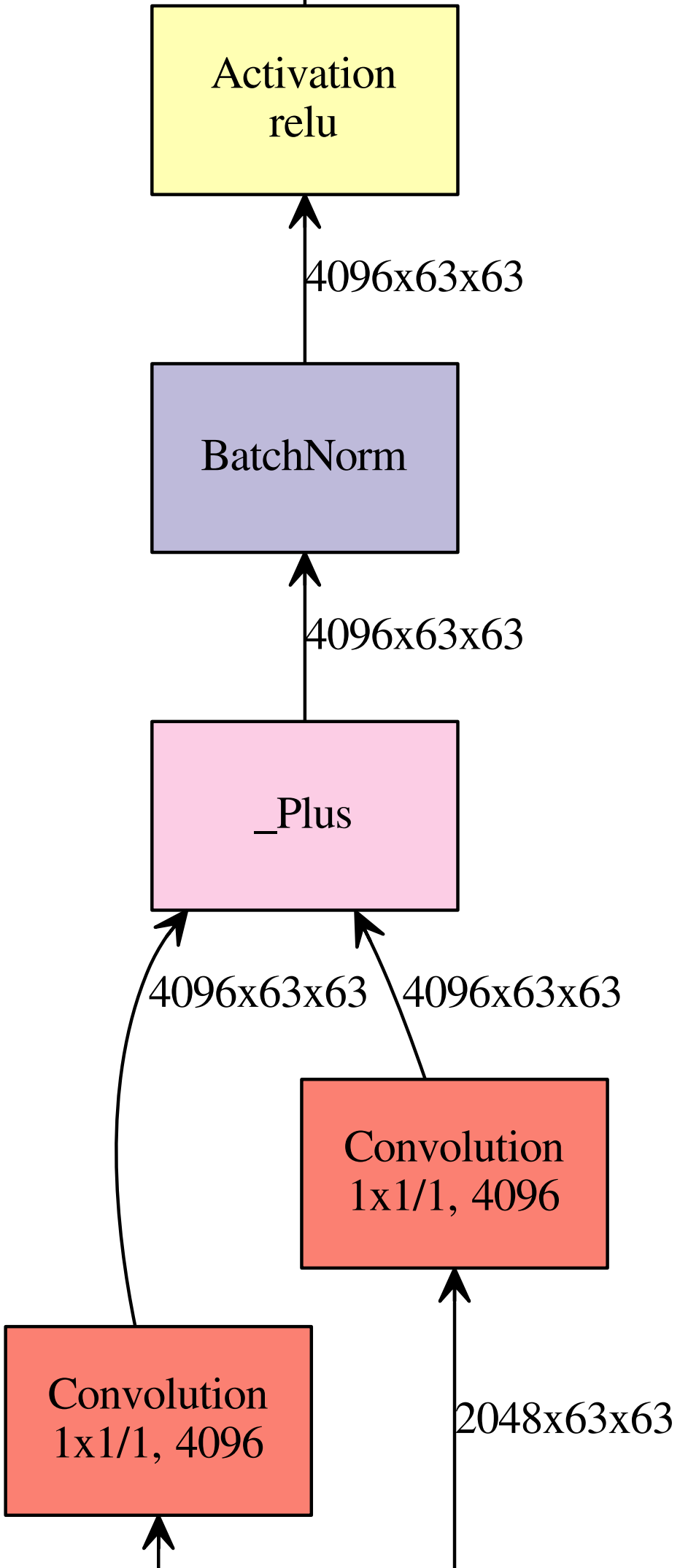
Activation
relu
4096x63x63
BatchNorm
4096x63x63
_Plus
4096x63x63
4096x63x63
Convolution
1x1/1, 4096
Convolution
1x1/1, 4096
2048x63x63

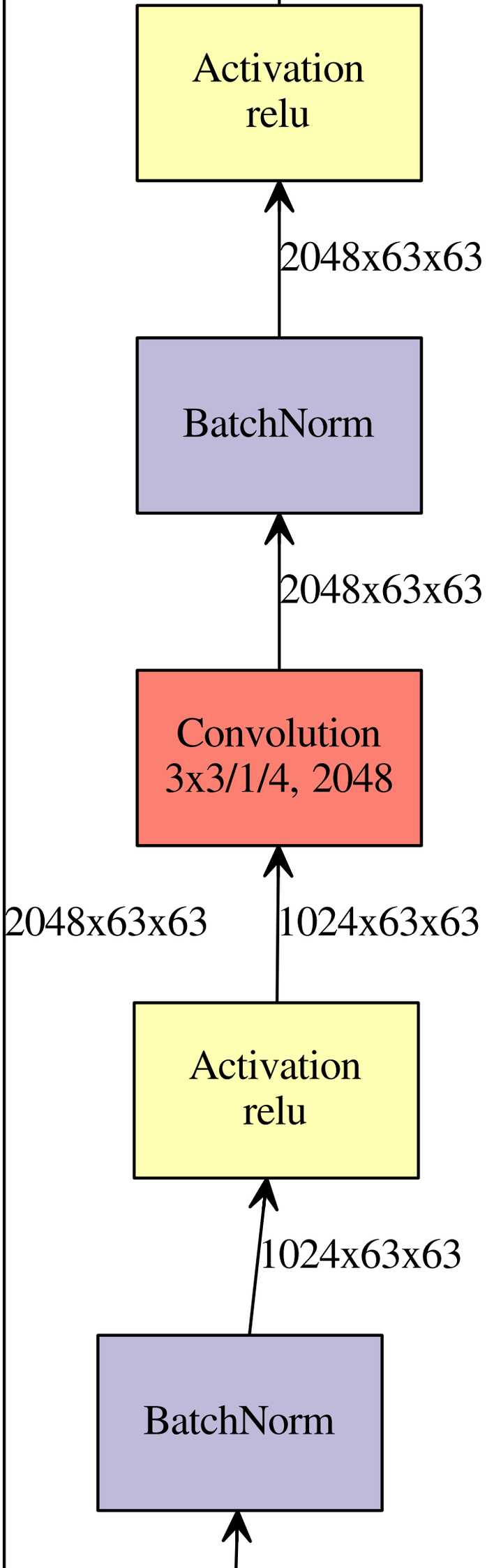
Activation
relu
2048x63x63
BatchNorm
2048x63x63
Convolution
3x3/1/4, 2048
2048x63x63
1024x63x63
Activation
relu
1024x63x63
BatchNorm

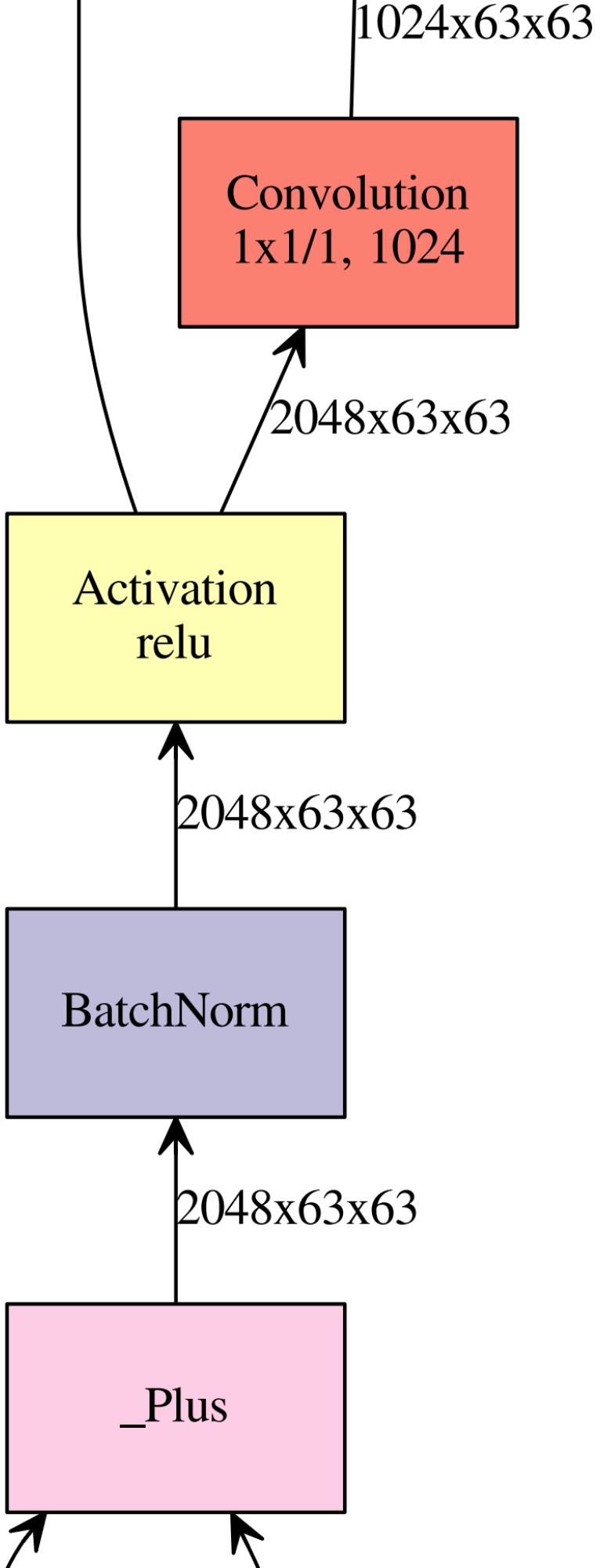
1024x63x63
Convolution
1x1/1, 1024
2048x63x63
Activation
relu
2048x63x63
BatchNorm
2048x63x63
_Plus

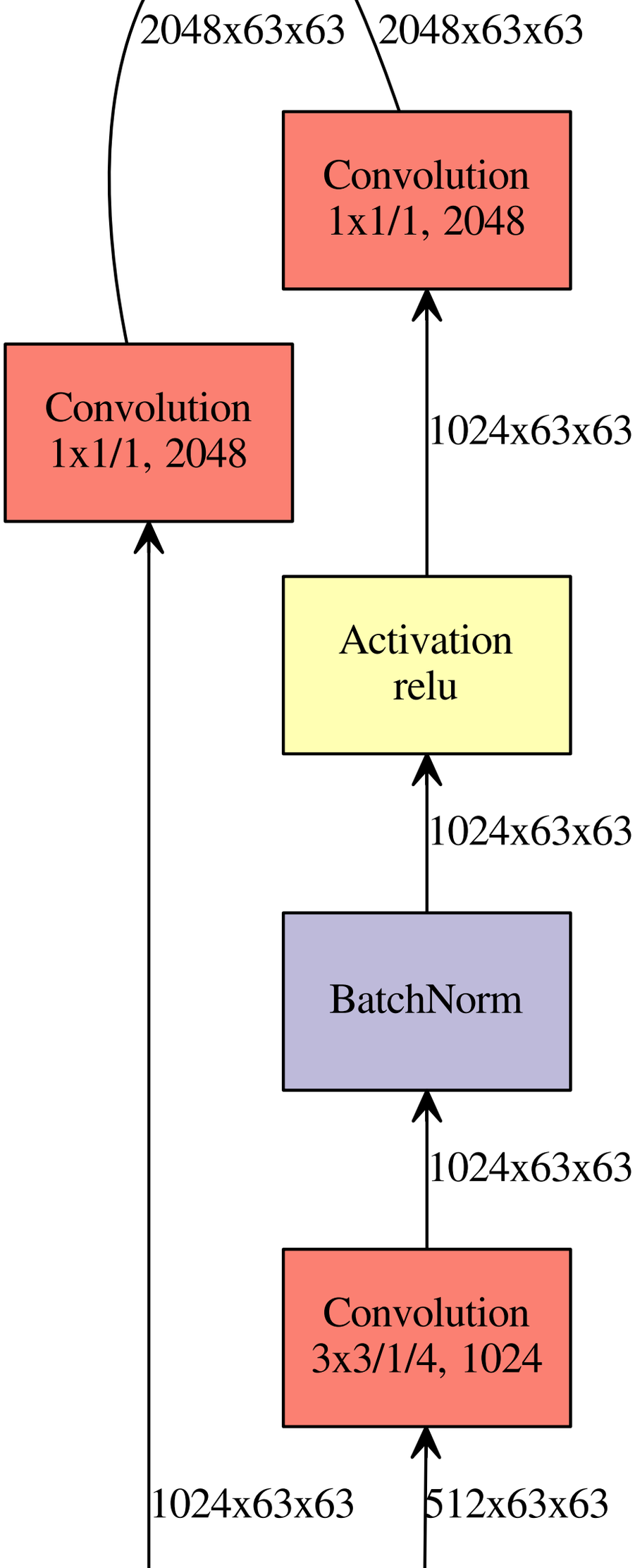
2048x63x63
2048x63x63
Convolution
1x1/1, 2048
Convolution
1x1/1, 2048
1024x63x63
Activation
relu
1024x63x63
BatchNorm
1024x63x63
Convolution
3x3/1/4, 1024
1024x63x63
512x63x63

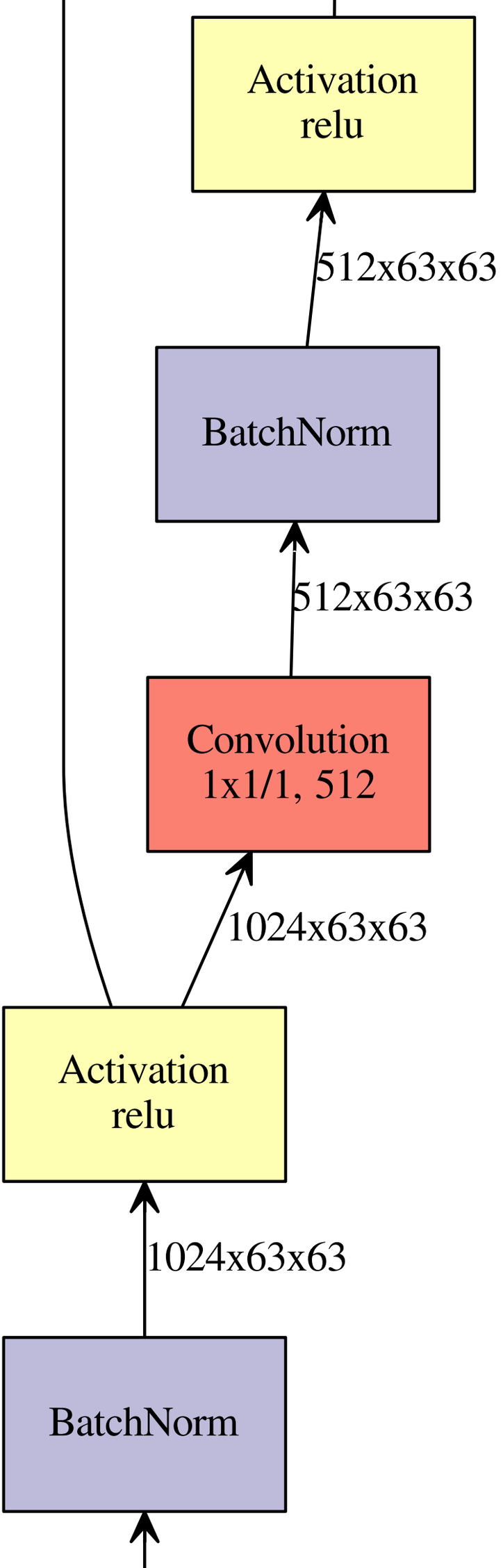
Activation
relu
512x63x63
BatchNorm
512x63x63
Convolution
1x1/1, 512
1024x63x63
Activation
relu
1024x63x63
BatchNorm

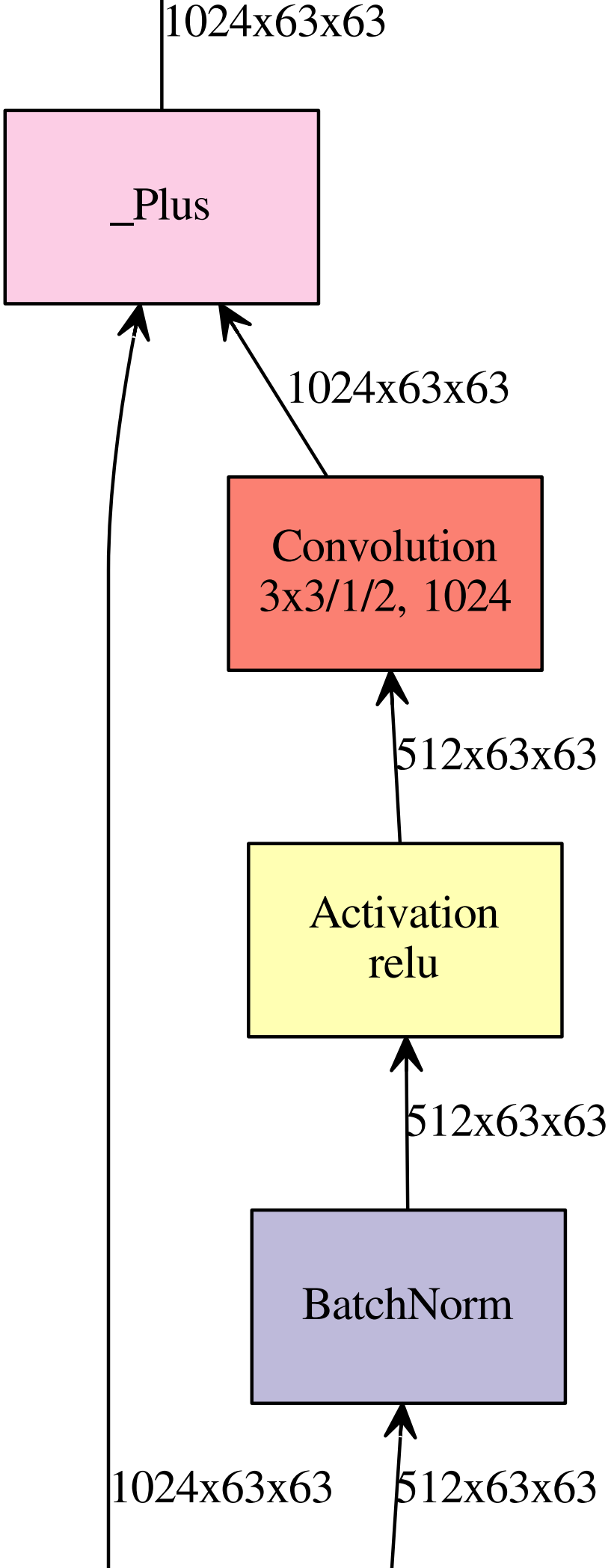
1024x63x63
_Plus
1024x63x63
Convolution
3x3/1/2, 1024
512x63x63
Activation
relu
512x63x63
BatchNorm
1024x63x63
512x63x63

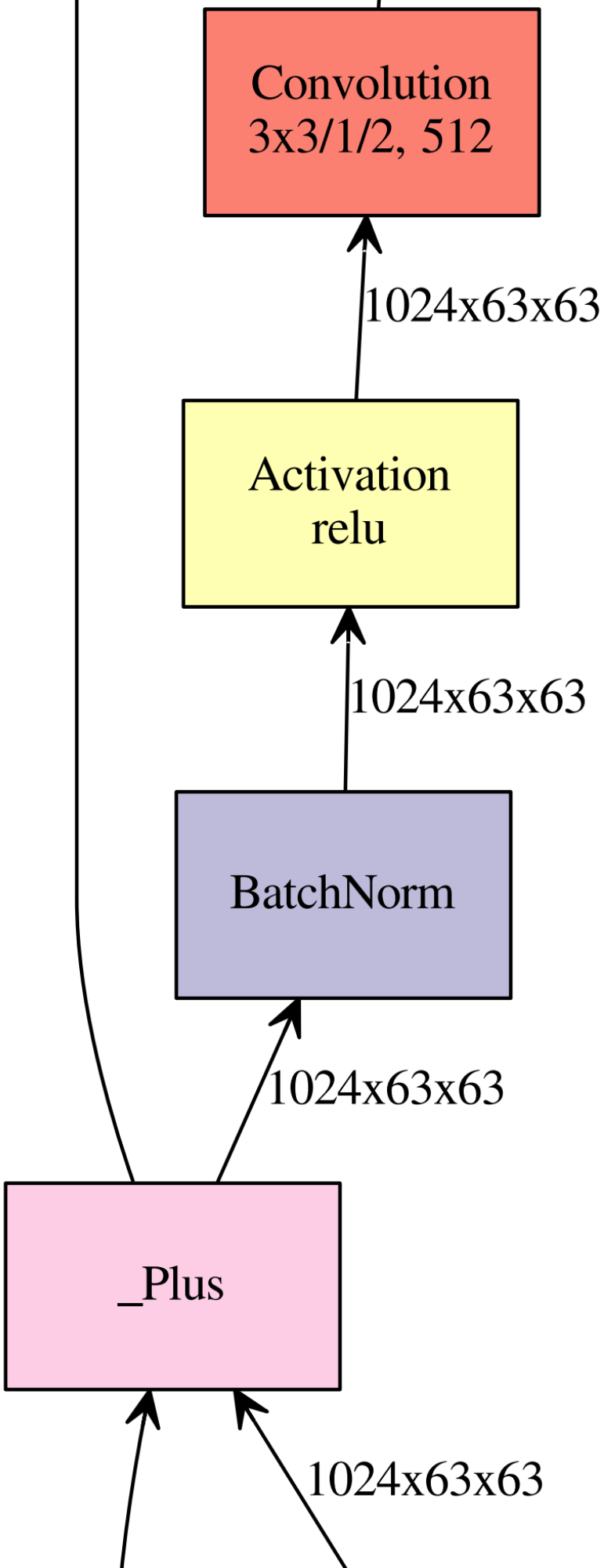
Convolution
3x3/1/2, 512
1024x63x63
Activation
relu
1024x63x63
BatchNorm
1024x63x63
_Plus
1024x63x63

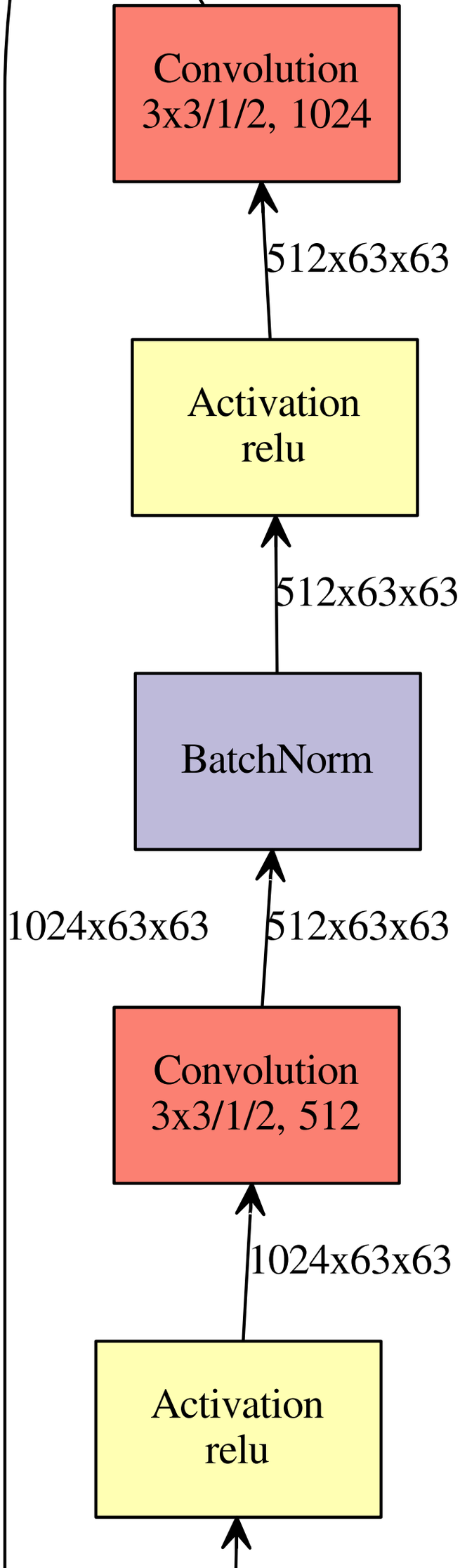
Convolution
3x3/1/2, 1024
512x63x63
Activation
relu
512x63x63
BatchNorm
1024x63x63
512x63x63
Convolution
3x3/1/2, 512
1024x63x63
Activation
relu

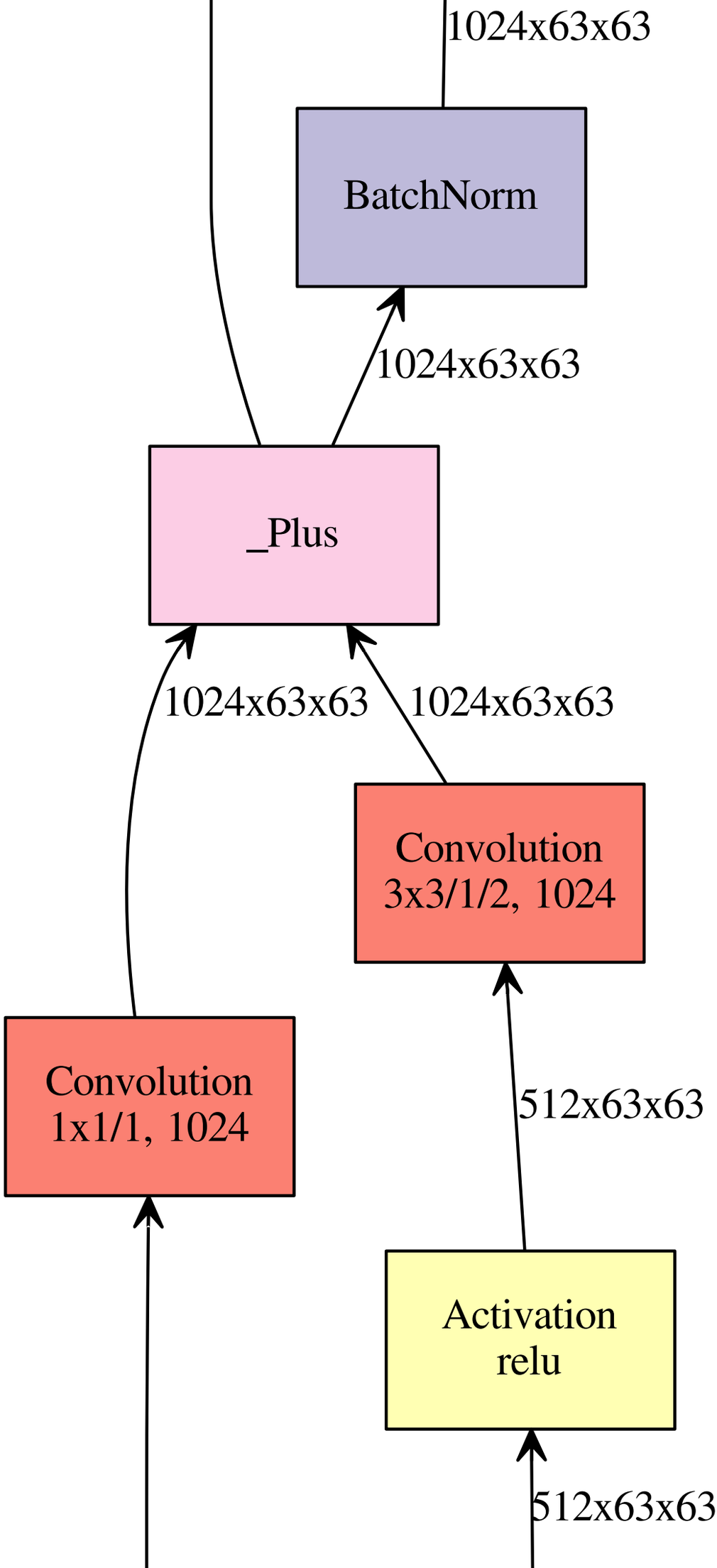
1024x63x63
BatchNorm
1024x63x63
_Plus
1024x63x63
1024x63x63
Convolution
3x3/1/2, 1024
Convolution
1x1/1, 1024
512x63x63
Activation
relu
512x63x63

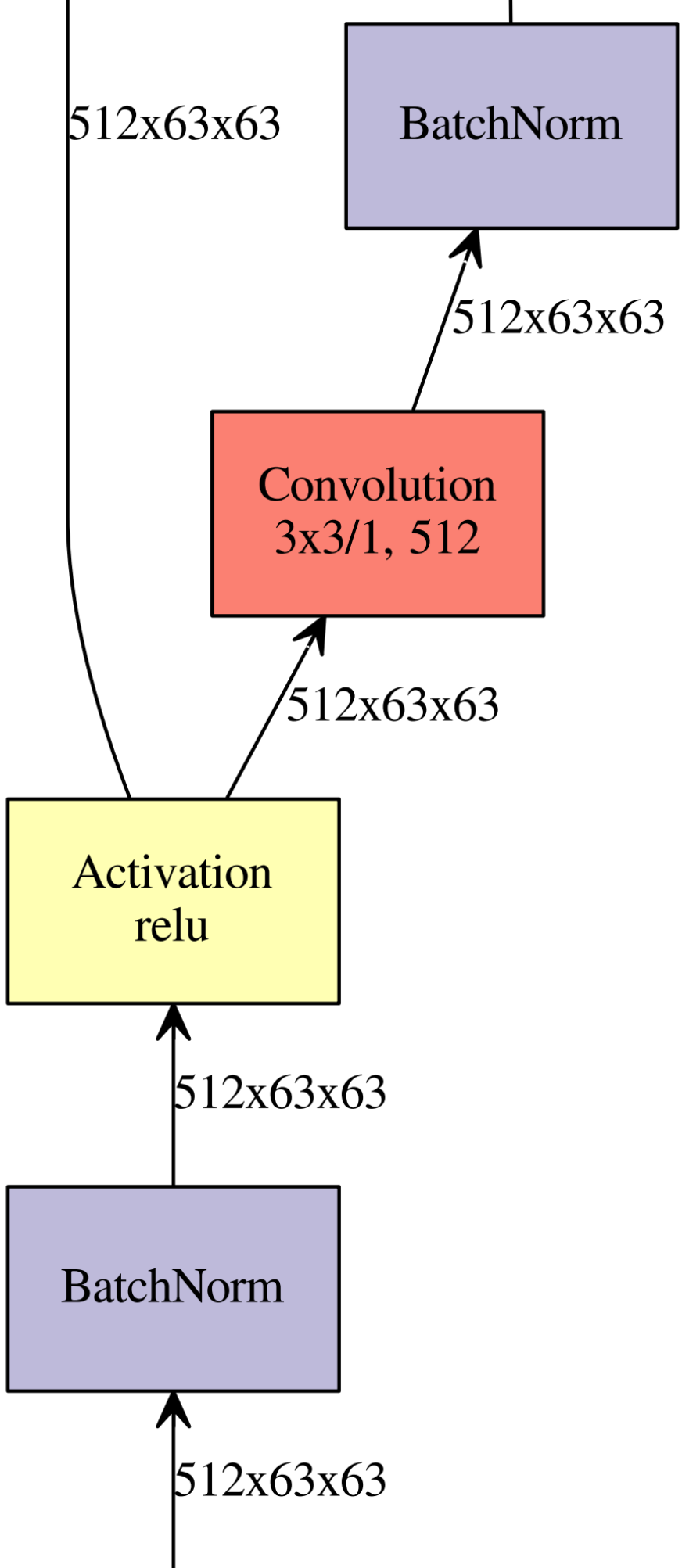
512x63x63
BatchNorm
512x63x63
Convolution
3x3/1, 512
512x63x63
Activation
relu
512x63x63
BatchNorm
512x63x63

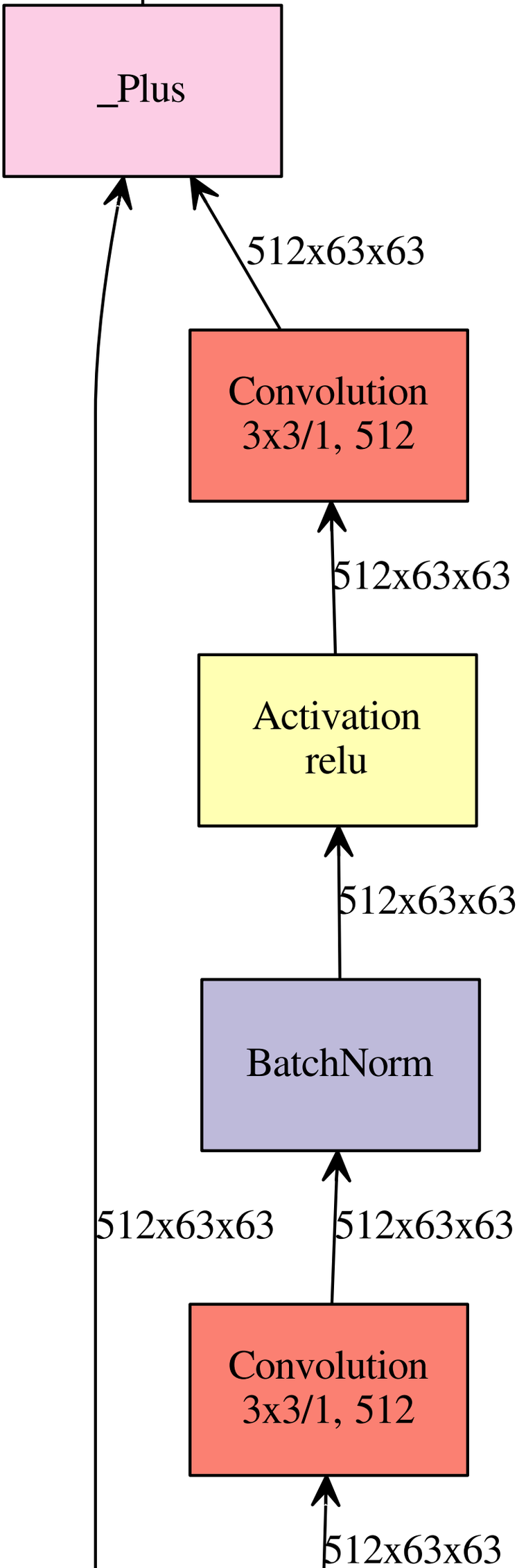
_Plus
512x63x63
Convolution
3x3/1, 512
512x63x63
Activation
relu
512x63x63
BatchNorm
512x63x63
512x63x63
Convolution
3x3/1, 512
512x63x63

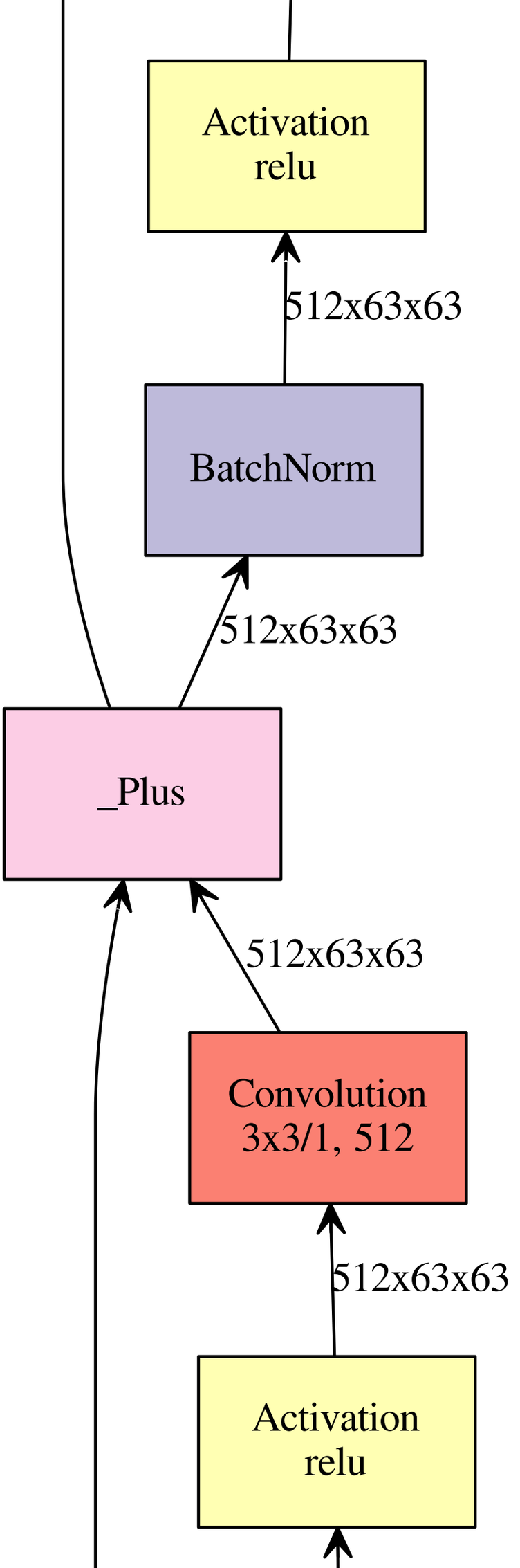
Activation
relu
512x63x63
BatchNorm
512x63x63
_Plus
512x63x63
Convolution
3x3/1, 512
512x63x63
Activation
relu

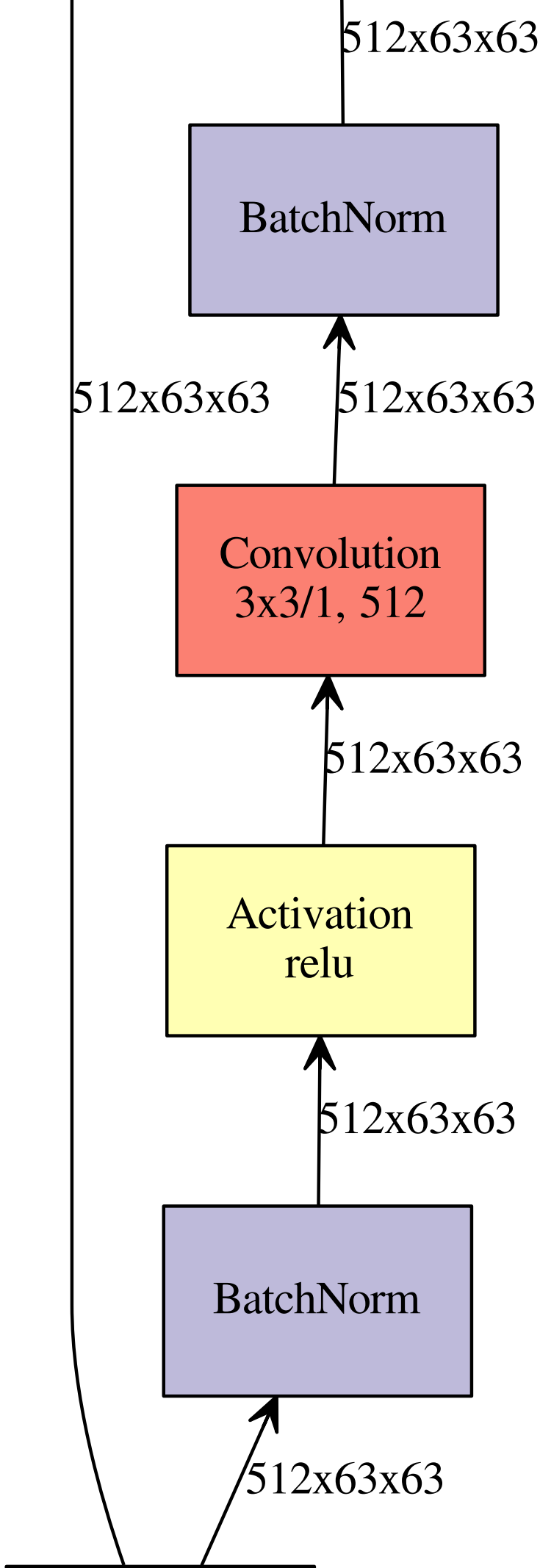
512x63x63
BatchNorm
512x63x63
512x63x63
Convolution
3x3/1, 512
512x63x63
Activation
relu
512x63x63
BatchNorm
512x63x63

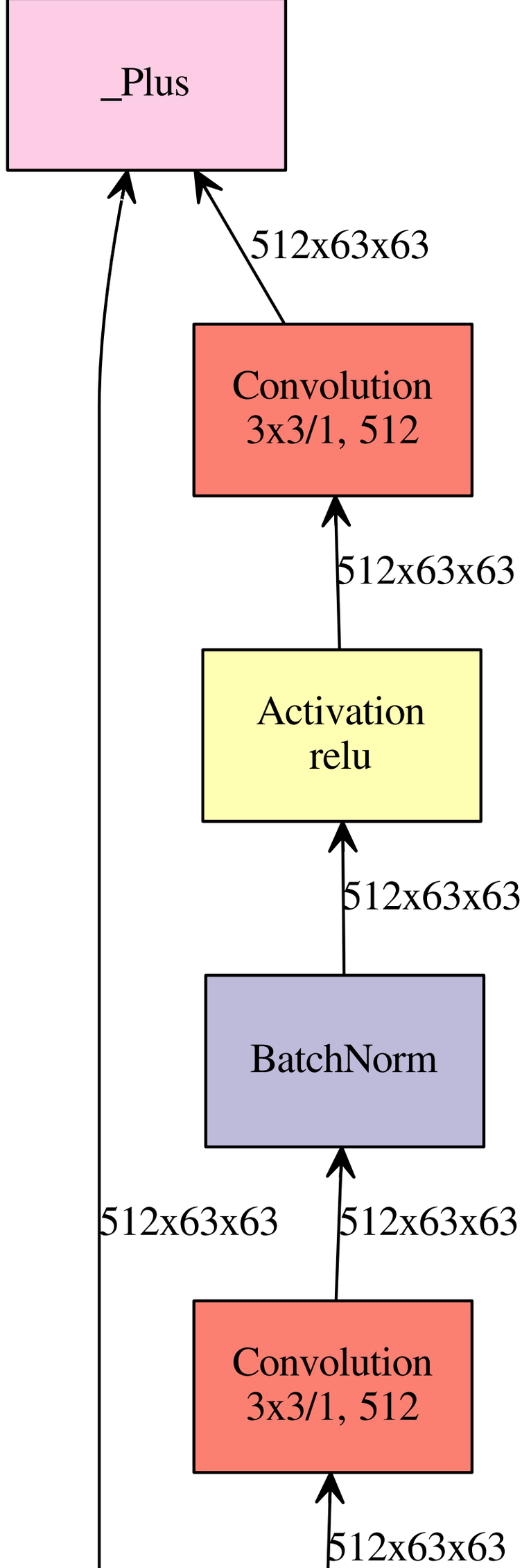
_Plus
512x63x63
Convolution
3x3/1, 512
512x63x63
Activation
relu
512x63x63
BatchNorm
512x63x63
512x63x63
Convolution
3x3/1, 512
512x63x63

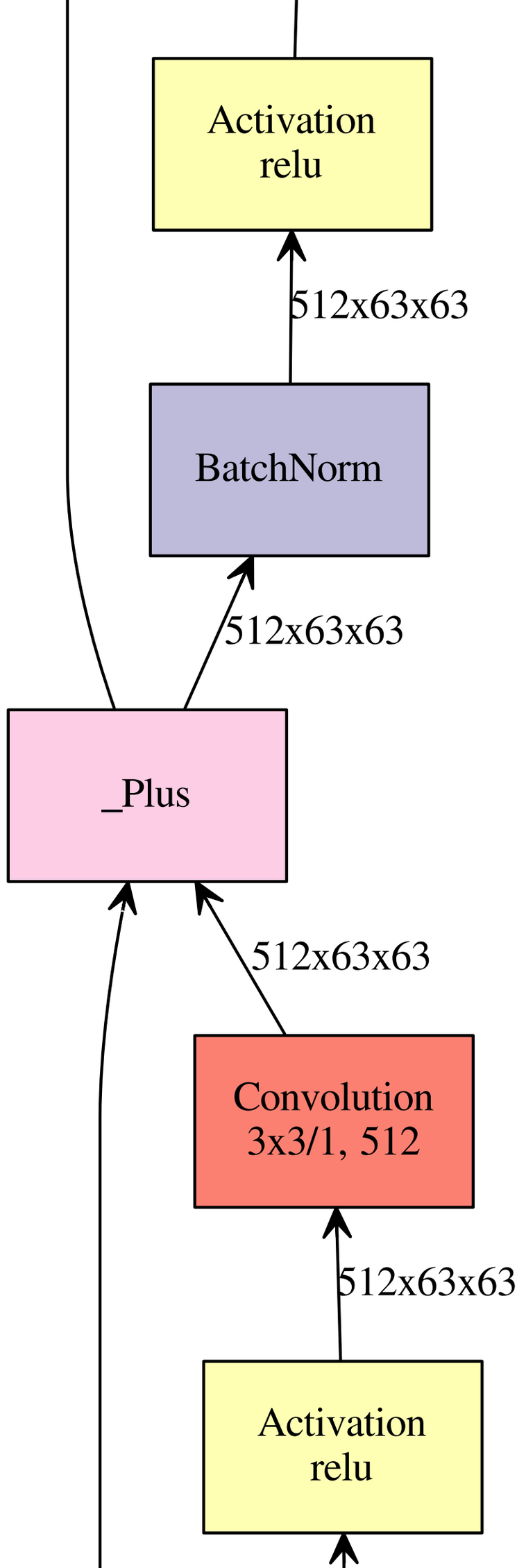
Activation
relu
512x63x63
BatchNorm
512x63x63
_Plus
512x63x63
Convolution
3x3/1, 512
512x63x63
Activation
relu

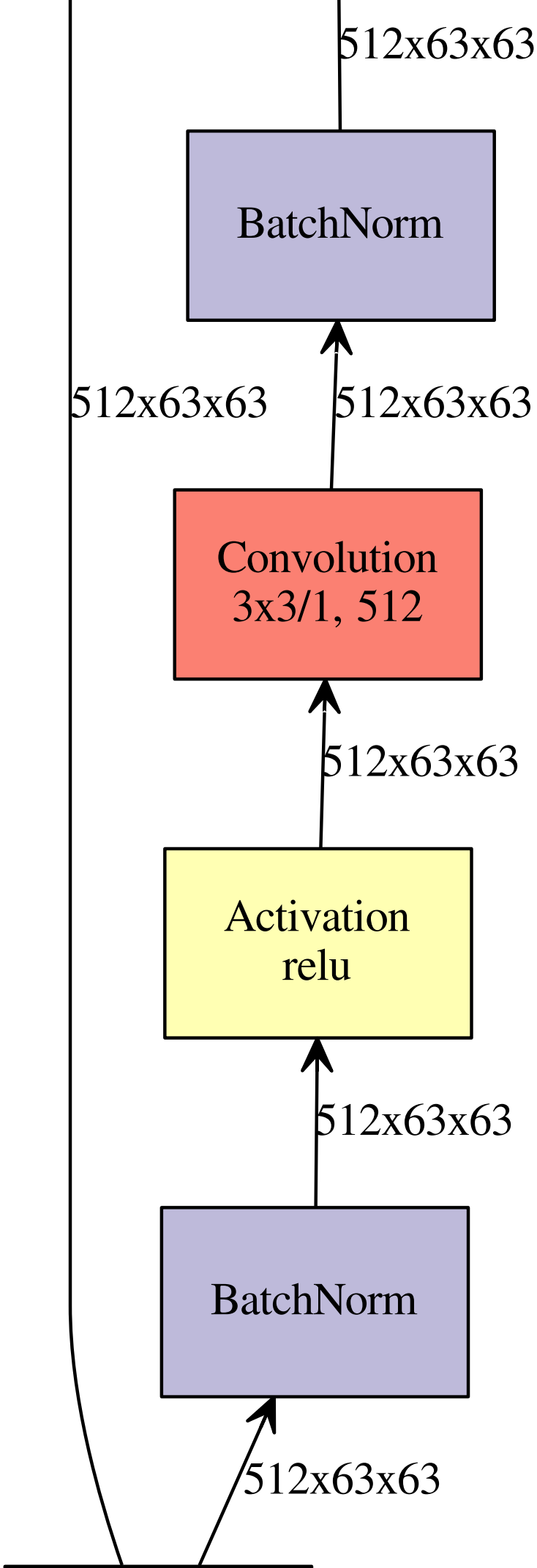
512x63x63
BatchNorm
512x63x63
512x63x63
Convolution
3x3/1, 512
512x63x63
Activation
relu
512x63x63
BatchNorm
512x63x63

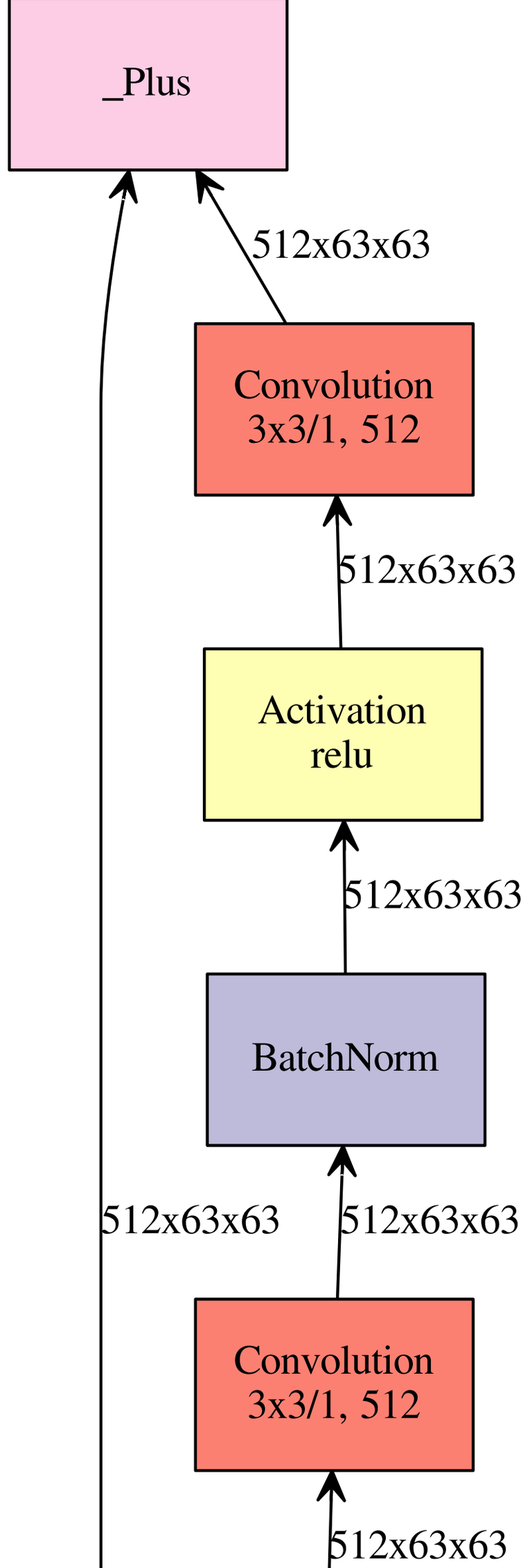
_Plus
512x63x63
Convolution
3x3/1, 512
512x63x63
Activation
relu
512x63x63
BatchNorm
512x63x63
512x63x63
Convolution
3x3/1, 512
512x63x63

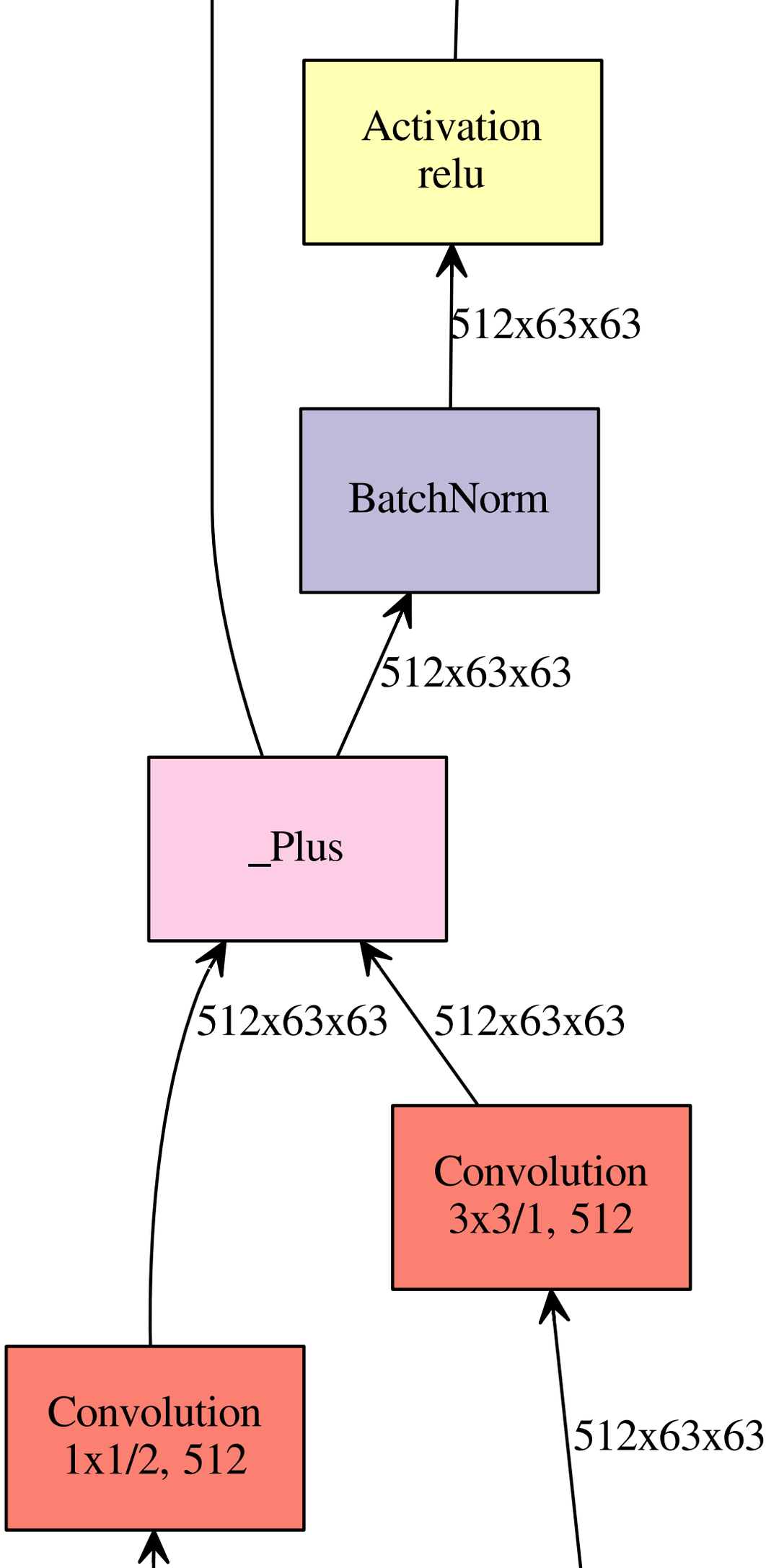
Activation
relu
512x63x63
BatchNorm
512x63x63
_Plus
512x63x63
512x63x63
Convolution
3x3/1, 512
Convolution
1x1/2, 512
512x63x63

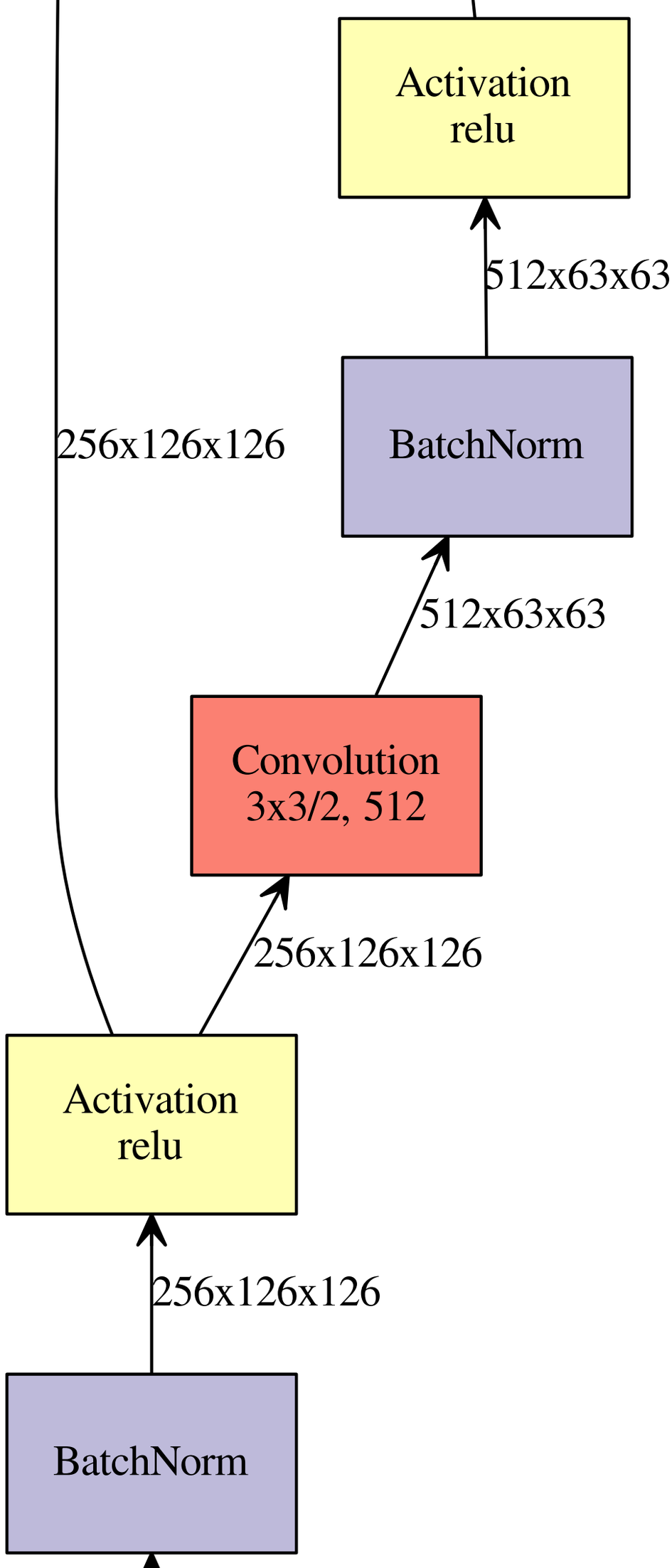
Activation
relu
512x63x63
BatchNorm
256x126x126
512x63x63
Convolution
3x3/2, 512
256x126x126
Activation
relu
256x126x126
BatchNorm

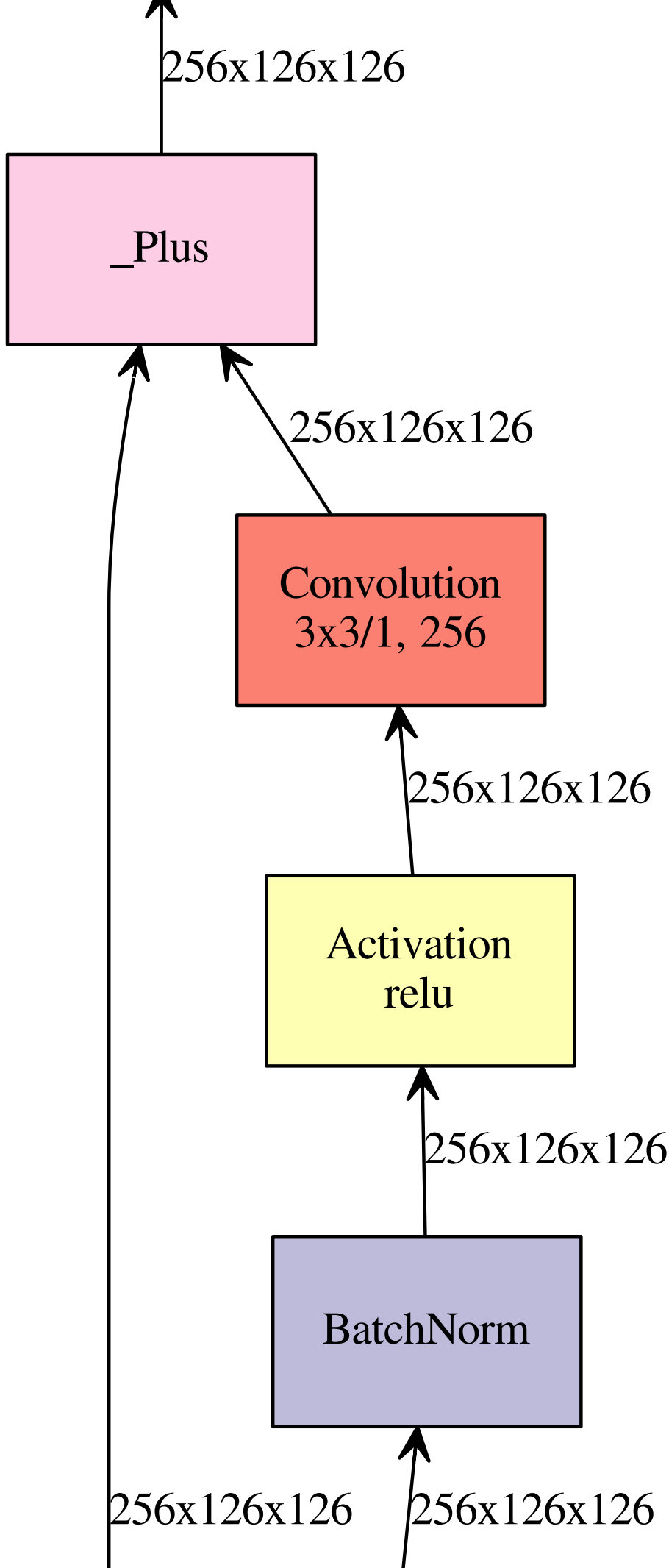
256x126x126
_Plus
256x126x126
Convolution
3x3/1, 256
256x126x126
Activation
relu
256x126x126
BatchNorm
256x126x126
256x126x126

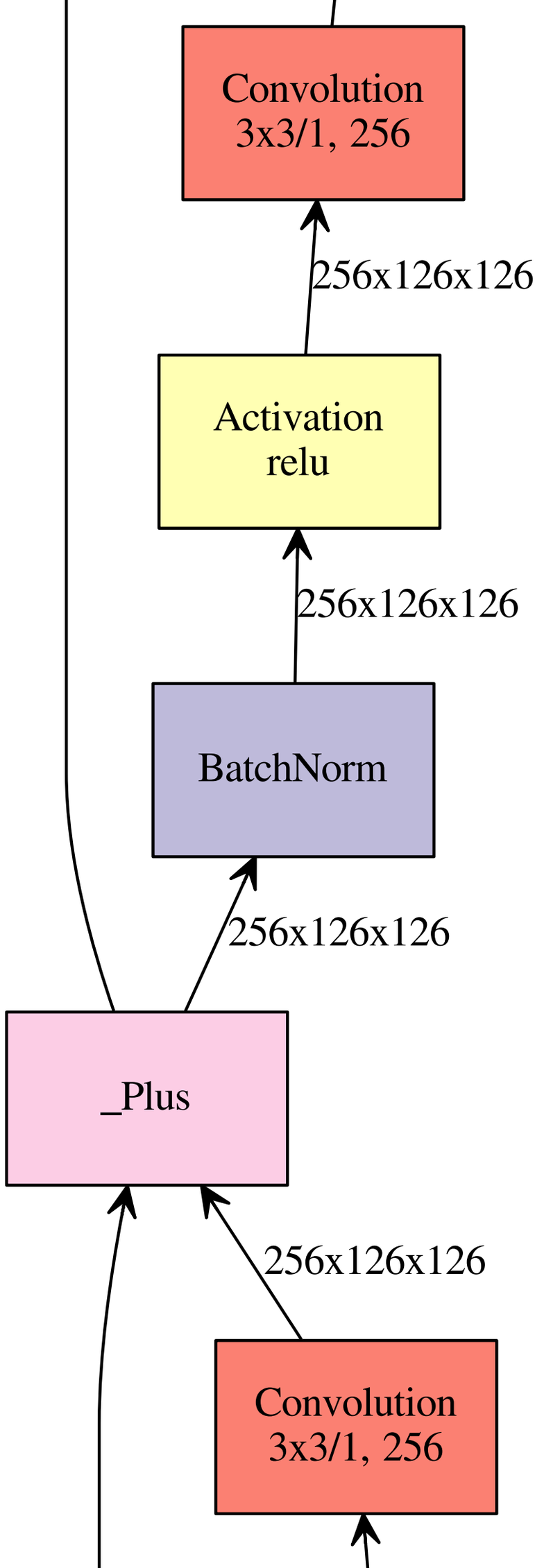
Convolution
3x3/1, 256
256x126x126
Activation
relu
256x126x126
BatchNorm
256x126x126
_Plus
256x126x126
Convolution
3x3/1, 256

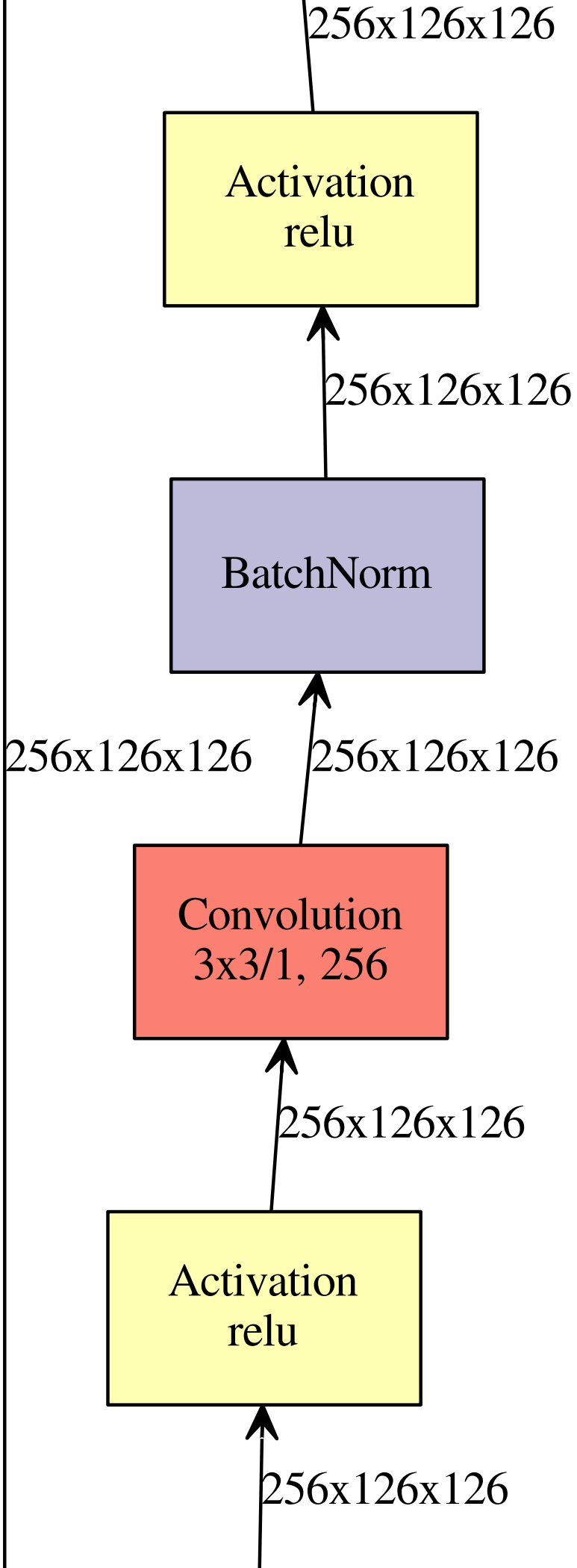
256x126x126
Activation
relu
256x126x126
BatchNorm
256x126x126
256x126x126
Convolution
3x3/1, 256
256x126x126
Activation
relu
256x126x126

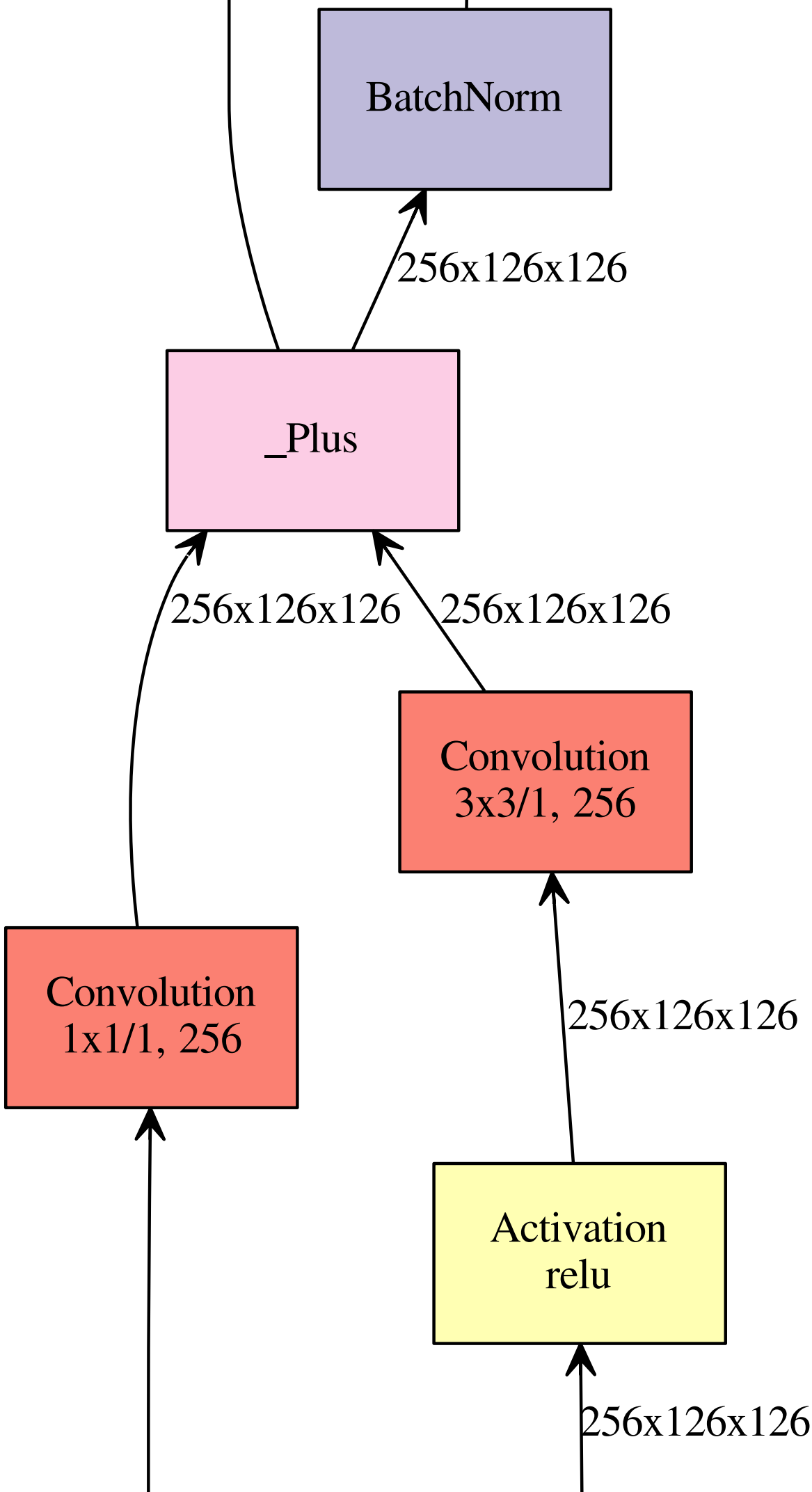
BatchNorm
256x126x126
_Plus
256x126x126
256x126x126
Convolution
3x3/1, 256
Convolution
1x1/1, 256
256x126x126
Activation
relu
256x126x126

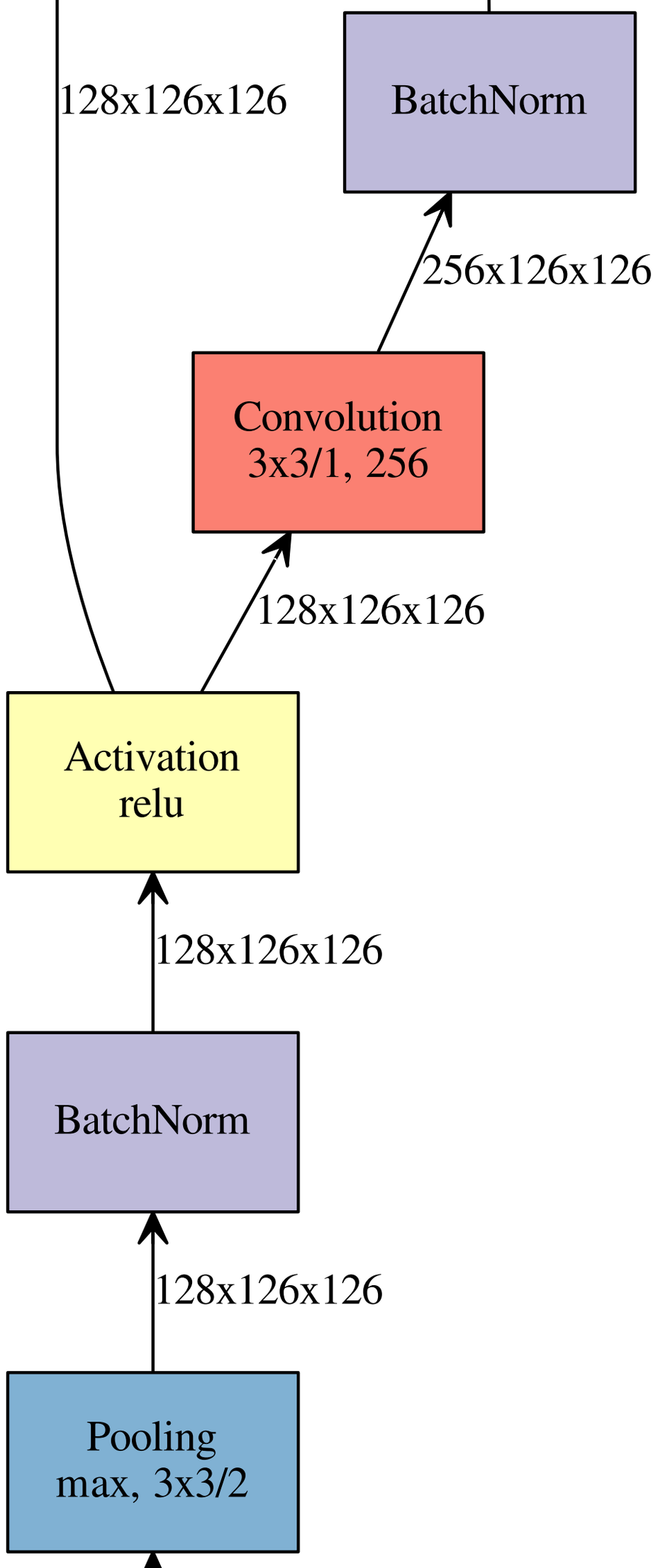
128x126x126
BatchNorm
256x126x126
Convolution
3x3/1, 256
128x126x126
Activation
relu
128x126x126
BatchNorm
128x126x126
Pooling
max, 3x3/2

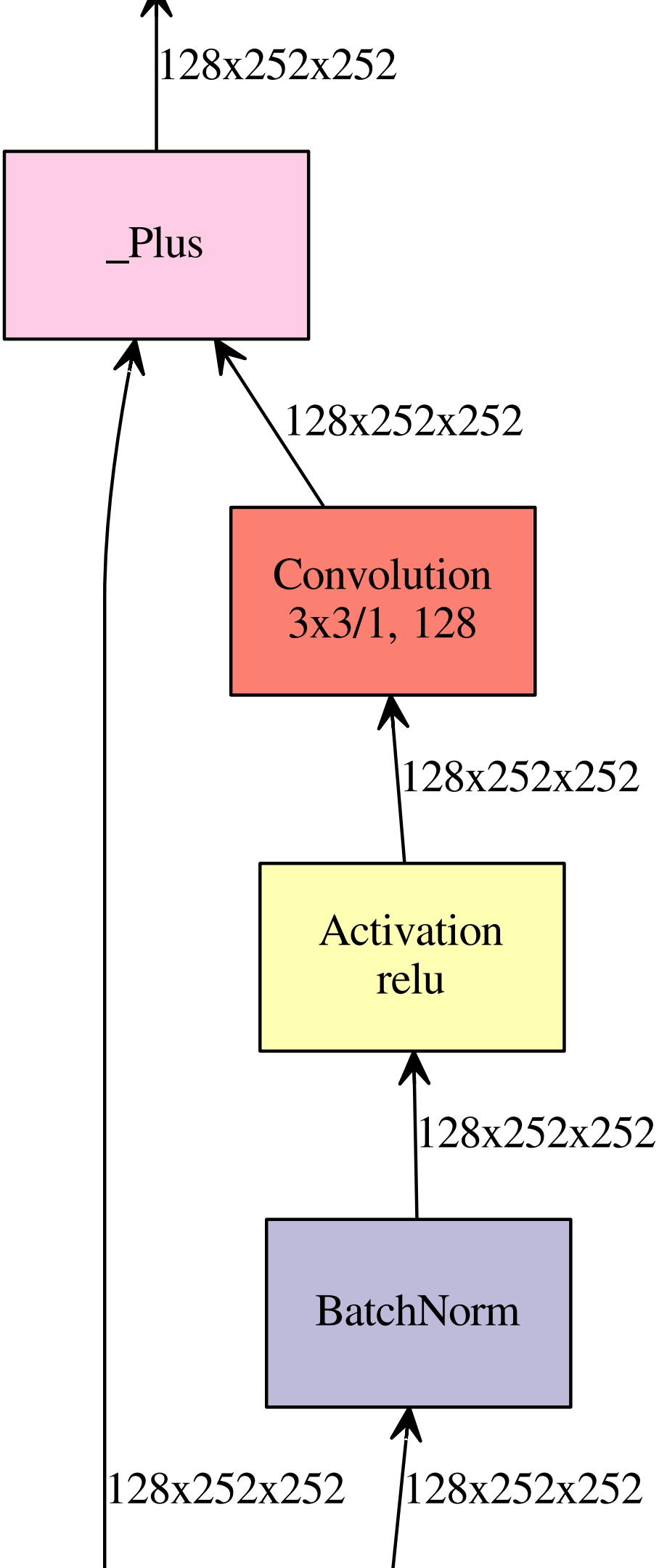
128x252x252
_Plus
128x252x252
Convolution
3x3/1, 128
128x252x252
Activation
relu
128x252x252
BatchNorm
128x252x252
128x252x252

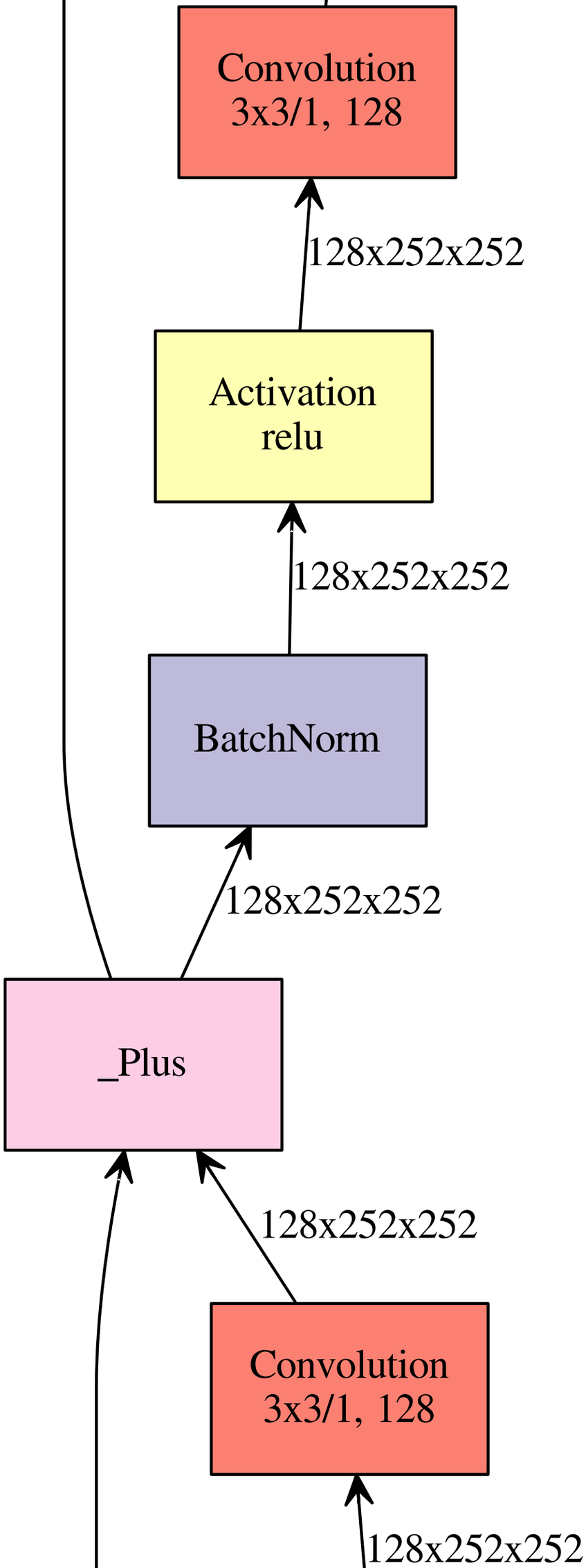
Convolution
3x3/1, 128
128x252x252
Activation
relu
128x252x252
BatchNorm
128x252x252
_Plus
128x252x252
Convolution
3x3/1, 128
128x252x252

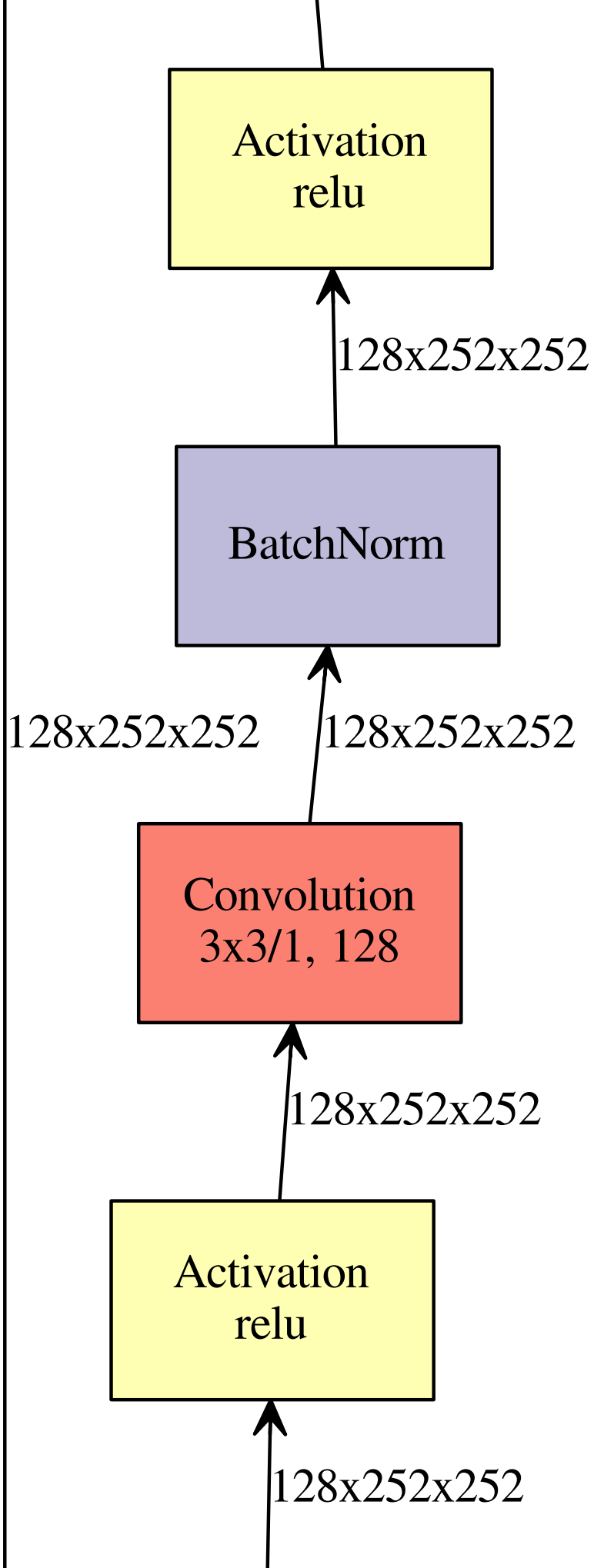
Activation
relu
128x252x252
BatchNorm
128x252x252
128x252x252
Convolution
3x3/1, 128
128x252x252
Activation
relu
128x252x252

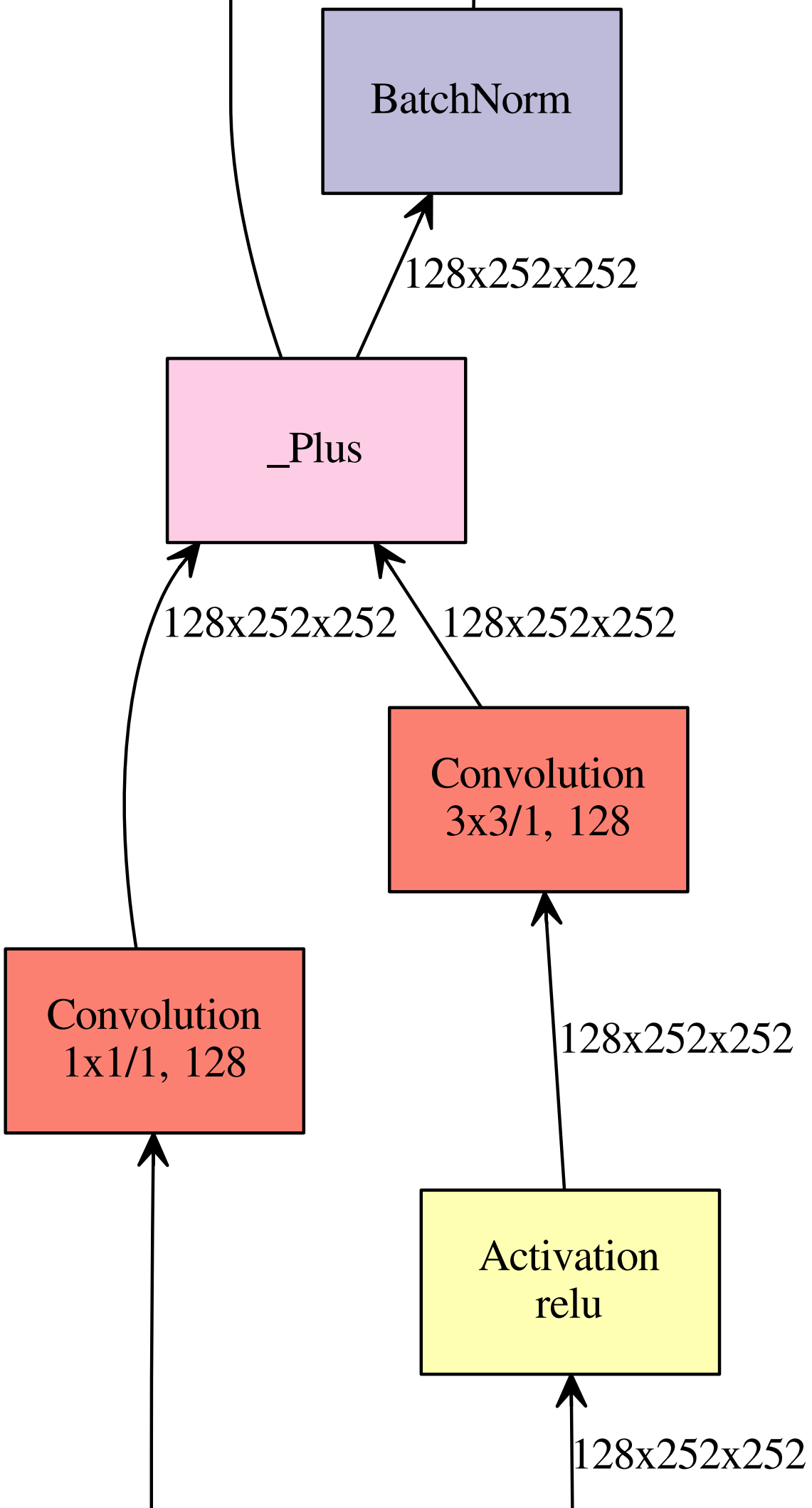
BatchNorm
128x252x252
_Plus
128x252x252
128x252x252
Convolution
3x3/1, 128
Convolution
1x1/1, 128
128x252x252
Activation
relu
128x252x252

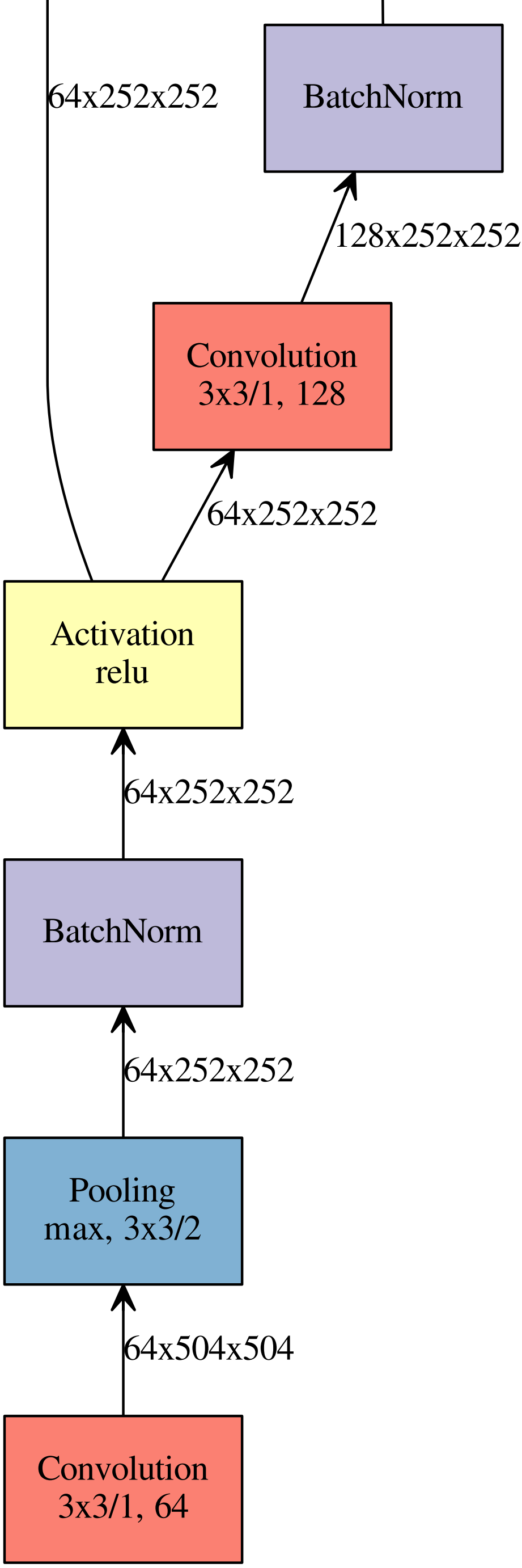
64x252x252
BatchNorm
128x252x252
Convolution
3x3/1, 128
64x252x252
Activation
relu
64x252x252
BatchNorm
64x252x252
Pooling
max, 3x3/2
64x504x504
Convolution
3x3/1, 64