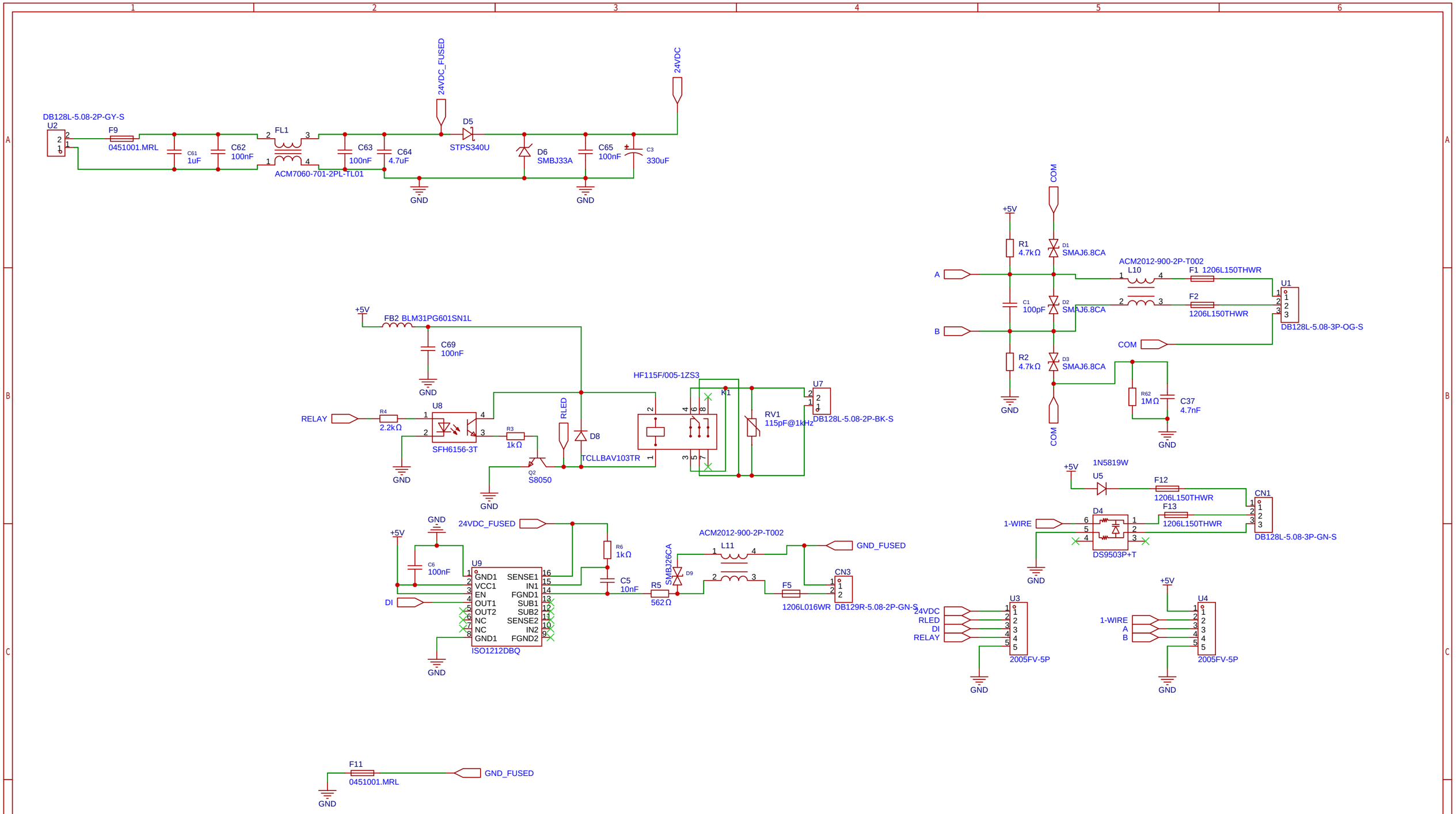

Schematic	RelayBoard	Update Date	2026-01-24
		Create Date	2024-12-25
Page	RelayBoard	Part Number	
Drawn	ESP32 MicroPLC		
Reviewed			
		VER	SIZE	PAGE 1 OF 1
Modular Control Custom Logic		V1.0	A3	ISYSTEMS AUTOMATION S.R.L.