Statement manufacturer and authorization regarding application

This statement must only be sent with new "00" applications. This applies to both the statements that the application has not been submitted to another authority and the authorization of the applicant. If the authorized party is changed in the meantime (i.e. in case of an extension or correction request), this declaration must be filled in again.

EC & UNECE type-approval number : E4*129R03/07*0216*00

☒ **Manufacturer/** ☐ **Manufacturer's representative** [1]

Company name	:	Ningbo Wegro Children Products Co., Ltd.
Name authorized person	:	Judy Chu
Job title	:	General manager
E-mail address	:	judy.chu@wegro.cn
Address manufacturer	:	2F Bldg. 3, No. 29, Lane 321, Tongning Road, Jiangbei District, 315033, Ningbo, Zhejiang Province, China (PRC)
Country	:	China

Statement

Hereby : Judy Chu ,
declares on behalf of
the manufacturer : Ningbo Wegro Children Products Co., Ltd. ,
for the application with
type-approval number : E4*129R03/07*0216*00 ,
the following:

a) the manufacturer has not applied for an EC & UNECE type-approval for the same type to any other approval authority, and no other approval authority granted the manufacturer such an approval;
b) no approval authority has refused to grant type-approval of that type;
c) no approval authority has withdrawn type-approval of that type;
d) the manufacturer has not revoked an application for a type-approval of that type.

Authorization regarding handling of this application (if applicable) [2]

Company name	:	TÜV SÜD Certification and Testing (China) Co., Ltd. Shanghai Branch
E-mail address	:	Lei.zhang3@tuvsud.com
Address	:	3-13, No.151 Heng Tong Road, 200070, Shanghai
Country	:	China

Authorization

By means of this
declaration, I : Judy Chu ,
on behalf of : Ningbo Wegro Children Products Co., Ltd. ,
authorizes : TÜV SÜD Certification and Testing (China) Co., Ltd. Shanghai Branch ,
to respectively apply for a type-approval with type-approval number:
E4*129R03/07*0216*00 ,
handle all communication concerning this application and receive the type-approval certificate.

Date	**Place**	**Name:**
March 8, 2023	Ningbo City, China	Ningbo Wegro Children Products Co., Ltd.

On their behalf, signature : For and on behalf of NINGBO WEGRO CHILDREN PRODUCTS CO.,LTD Judy Chu Authorized Signature(s)

Name : Judy Chu

[1] Mark the specific checkbox.
[2] This authorization only concerns the application procedure and all activities that are directly or indirectly related to this procedure. If and insofar as other procedures, including the lodging of objections, are deemed necessary, a new authorization must be submitted in respect of that specific procedure.

THE NETHERLANDS
(N E D E R L A N D)

E4

COMMUNICATION

Concerning [1]:

- approval granted
- ~~approval extended~~
- ~~approval refused~~
- ~~approval withdrawn~~
- ~~production definitively discontinued~~

of restraining devices for child occupants of power-driven vehicles, pursuant to Regulation number 129.

Approval number: E4*129R03/07*0216*00

1.1. Forward-facing Enhanced Child Restraint System/~~rearward-facing Enhanced Child Restraint System~~ /~~lateral-facing Enhanced Child Restraint System~~

1.2. Integral/Non integral [1]

1.3. Belt type : (adult) three-point belt/~~(adult) lap belt~~/ ~~special type belt/retractor~~ [1]

1.4. Other features : chair assembly/~~impact shield~~ [1]

P.O. Box 777
2700 AT Zoetermeer
The Netherlands

Tel. + 31 79 345 83 02
E-mail typeapproval@rdw.nl
www.rdw.nl

Type-approval Department

2. Trade name or mark : HEMERA, HEMERA FIX, HEMERA FIX BASIC, HEMERA FIX SP BASIC, HEMERA FIX SP PRO, WEGRO, Angelbaby, B&B WORLD, Nurse, Be Cool, Jane, Foppapedretti, KinderKraft, Fedora, SMYK, MALLER, JUNIORS, BABY&PLUS, KRAFT, Easybaby, Pierr Cardin Paris, X-ADVENTURE, Baby Design, Babyton, MS, Happy Baby, Phil&teds, Cosatto, Galzerano, Camera, KISS BABY, WEI-B, KANZ, BABY CODE, PIERR CARDIN, BABY2GO, NICE BABY, SAFEWAY, INFABABY, Cotobaby, Babyhome, Silver Cross, ADAMEX, Bebesit, Axkid, Babycare, Halfords, Prinsel, Kooltrade, CuddleCo, BabySafe, Babyauto, Bebesafe, Infanti, Cosco, Maxicosi, Kiddy, Bambino, Romer, Chipolino, Babystart, Skep, Kikkaboo, Bebe Stars, Kiddo, RETRUS, coletto, asalvo, ctrl, BABYCO, Leatherette, Prams, Angelo, EASYGO, COLIBRO, Nania, AXONKIDS, DOREL, bbqool, bene baby, king baby, mega baby, HALFORD, Hugo Baby, KOOPERS, BEBLUM, OODS, AVORA, Perodua, Cam, EURO CART CAVOE, More, Formula baby, Migo, William Kent, skiddoü, Titaniumbaby, Kidsriver, Auto Comfort, Aldo, AEGIS, MAGIC, BeBaby, KidGo, KidMobil, Kidwell, Babify, TIMGRO, Martin noir, 2ME, EKOBEBE, Babysing, Wegrobaby, Elittle, ELITTILE, motherknows, Babyboat, 哈秀 Haxiu, playful, besbet, qborn, pouch, ESPIRO, 4BABY, Telforceone, MOMI, SPACEHOLDING, BORSINO, PLAY, Baby Direkt, ZOPA, COZY & SAFE, ESCOS, SEEC, Bebe2luxe, Renolux, Heyner, mybaby, My child, Babygo, Leclerc Baby, Silver Cross, My Junior, Kangaroo, Careone, Bebecar, Britton, SUNBABY, Hauck, Babyway, Infans, Ecotoys, Extreme Digital, 西松屋, Loopingfun, Star Ibaby, KIDSRIVER, CABINO, thansen, infababy, Smart baby, Casualplay, playxtrem, playmarket, DAIICHI, OLMITOS, niu, lionelo, Soonsung, quintonbaby, fairgo, kidgo, KISSBABY, EMBIX, CAMERA, BABYLO, glowystar, concord, Wah Ha, sweet heart paris, cxc, capsula, Petite & Mars, premaman, BonBijou, soluzo, PRINCE & PRINCESS, cocolatte, AKEEVA, Ledibaby(Sonic signal pro), GLOWY, BANANA, Beblum, Peppy, tuctuc, coccolle, ABC DESIGN, heyner, klippan, kidsriver, maxibaby, Royal home, Lunababy, Falcon Fresh, Millsons of London, Ryan, Bebecarucior, Leaman, Elele, Elelebaby, Miniuno, Phil&Teds, Casual, junglebaby, Inglesina, borsino, Iperbimbo, Pituso, Prados, Roys, ledibaby (Space Capsule 2 Pro), abner

Approval number: E4*129R03/07*0216*00

3.	Manufacturer's designation of the Enhanced Child Restraint System	:	WG07FIX
4.	Manufacturer's name	:	Ningbo Wegro Children Products Co., Ltd.
5.	If applicable, name of his representative	:	N/A
6.	Address	:	2F Bldg. 3, No. 29, Lane 321, Tongning Road, Jiangbei District, 315033, Ningbo, Zhejiang Province, China (PRC)
7.	Submitted for approval on	:	2023-02-18
8.	Technical service conducting approval tests	:	TÜV SÜD Auto Service GmbH Westendstraße 199 D-80686 München
9.	Type of device	:	deceleration/~~acceleration~~ [1]
10.	Date of test report issued by that service	:	2023-03-22
11.	Number of test report issued by that service	:	23-00521-CX-SHA-00
12.	Approval	:	granted/~~extended~~/~~refused~~/~~withdrawn~~ [1] for size range 76 to 150 cm for i-Size ~~specific vehicle or for use as a 'special needs restraint'~~, position in vehicle
13.	Position and nature of the marking	:	Sticker pasted on the back of product
14.	Place	:	Zoetermeer
15.	Date	:	31 May 2023
16.	Signature	:	

RDW

P. Berger

17. The following documents, bearing the approval number shown above, are attached to this communication:
    (a) Drawings, diagrams and plans of the Enhanced Child Restraint System, including any retractor, chair assembly, impact shield fitted;
    (b) Drawings, diagrams and plans of the vehicle structure and the seat structure, as well as of the adjustment system and the attachments, including any energy absorber fitted;
    (c) Photographs of the Enhanced Child Restraint System and/or vehicle structure and seat structure;
    (d) Instructions for fitting and use;
    (e) List of vehicle models for which the restraint is intended.

[1] Strike out what does not apply.

T e s t R e p o r t

No.: 23-00521-CX-SHA-00

Test of a type of component
with regard to UN/ECE Regulation No.
129
including all amendments up to
supplement 7 to the 03 series of amendments

Approval subject:
Enhanced Child restraint system

Approval status	
☑	Granting of a type approval
☐	Extension/correction to type approval no. : ---

I. General

Make (trade name of manufacturer) :

HEMERA, HEMERA FIX, HEMERA FIX BASIC, HEMERA FIX SP BASIC, HEMERA FIX SP PRO, WEGRO, Angelbaby, B&B WORLD, Nurse, Be Cool, Jane, Foppapedretti, KinderKraft, Fedora, SMYK, MALLER, JUNIORS, BABY&PLUS, KRAFT, Easybaby, Pierr Cardin Paris, X-ADVENTURE, Baby Design, Babyton, MS, Happy Baby, Phil&teds, Cosatto, Galzerano, Camera, KISS BABY, WEI-B, KANZ, BABY CODE, PIERR CARDIN, BABY2GO, NICE BABY, SAFEWAY, INFABABY, Cotobaby, Babyhome, Silver Cross, ADAMEX, Bebesit, Axkid, Babycare, Halfords, Prinsel, Kooltrade, CuddleCo, BabySafe, Babyauto, Bebesafe, Infanti, Cosco, Maxicosi, Kiddy, Bambino, Romer, Chipolino, Babystart, Skep, Kikkaboo, Bebe Stars, Kiddo, RETRUS, coletto, asalvo, ctrl, BABYCO, Leatherette, Prams, Angelo, EASYGO, COLIBRO, Nania, AXONKIDS, DOREL, bbqool, bene baby, king baby, mega baby, HALFORD, Hugo Baby, KOOPERS, BEBLUM, OODS, AVORA, Perodua, Cam, EURO CART CAVOE, More, Formula baby, Migo, William Kent, skiddoü, Titaniumbaby, Kidsriver, Auto Comfort, Aldo, AEGIS, MAGIC, BeBaby, KidGo, KidMobil, Kidwell, Babify, TIMGRO, Martin noir, 2ME, EKOBEBE, Babysing, Wegrobaby, Elittle, ELITTILE, motherknows, Babyboat, 哈秀 Haxiu, playful, besbet, qborn, pouch, ESPIRO, 4BABY, Telforceone, MOMI, SPACEHOLDING, BORSINO, PLAY, Baby Direkt, ZOPA, COZY & SAFE, ESCOS, SEEC, Bebe2luxe, Renolux, Heyner, mybaby, My child, Babygo, Leclerc Baby, Silver Cross, My Junior, Kangaroo, Careone, Bebecar, Britton, SUNBABY, Hauck, Babyway, Infans, Ecotoys, Extreme Digital, 西松屋, Loopingfun, Star Ibaby, KIDSRIVER, CABINO, thansen, infababy, Smart baby, Casualplay, playxtrem, playmarket, DAIICHI, OLMITOS, niu, lionelo, Soonsung, quintonbaby, fairgo, kidgo, KISSBABY, EMBIX, CAMERA, BABYLO, glowystar, concord, Wah Ha, sweet heart paris, cxc, capsula, Petite & Mars, premaman, BonBijou, soluzo, PRINCE & PRINCESS, cocolatte, AKEEVA, Ledibaby(Sonic signal pro), GLOWY, BANANA, Beblum, Peppy, tuctuc, coccolle, ABC DESIGN, heyner, klippan, kidsriver, maxibaby, Royal home, Lunababy, Falcon Fresh, Millsons of London, Ryan, Bebecarucior, Leaman, Elele, Elelebaby, Miniuno, Phil&Teds, Casual, junglebaby, Inglesina, borsino, Iperbimbo, Pituso, Prados, Roys, ledibaby (Space Capsule 2 Pro), abner

Type	:	WG07FIX
Variant(s)	:	WG07FIX BASIC, WG07FIX SP BASIC, WG07FIX SP PRO
Commercial description(s)	:	N/A
Name and address of manufacturer	:	Ningbo Wegro Children Products Co., Ltd. 2F Bldg. 3, No. 29, Lane 321, Tongning Road, Jiangbei District, 315033, Ningbo, Zhejiang Province, China (PRC)
Name and address of manufacturer's representative (if applicable)	:	N/A
Address(es) of assembly plant(s)	:	Ningbo Wegro Children Products Co., Ltd. 2F Bldg. 3, No. 29, Lane 321, Tongning Road, Jiangbei District, 315033, Ningbo, Zhejiang Province, China (PRC)

Location and method of affixing of the approval mark : Sticker pasted on the back of product

II. Test results

Refer to the Annex II

III. Enclosures

Information folder No. 129-WG07FIX-00 dated 12.02.2023 (dd.mm.yyyy)

IV. Statement of conformity

The mentioned information folder and the type described therein are in accordance with the test basis mentioned above. Sampling plan or method result from the requirements of the test basis. The worst-case configuration was selected in accordance with process description "Requirements for Test Reports (AS-PB-T-02)". Valid decision rule in accordance with ILAC G8:2019, 4.2.1: in question of meeting the limits the measurement uncertainty was ignored.

The manufacturer is responsible for the information (III.) and the test specimens provided by him. The test results relate only to the test specimens as received and mentioned (II.). The test specimens are representative for the type described (III.).

The test report may be reproduced and published in full and by the client only. It can be reproduced partially with the written permission of the test laboratory only.

TÜV SÜD Auto Service GmbH is designated as Technical Service by:

Approval authority	Country	Registration number
Kraftfahrt-Bundesamt (KBA)	Germany	KBA-P 00100-10
Vehicle Certification Agency (VCA)	United Kingdom	VCA-TS-006
Approval Authority of the Netherlands (RDW)	The Netherlands	RDWT-082-xx
National Standards Authority of Ireland (NSAI)	Ireland	Technical Service Number: 49
Société Nationale de Certification et d'Homologation (SNCH)	Luxembourg	13/B(g)
Swedish Transport Agency (STA)	Sweden	TT 0024

München, 22.03.2023 (dd.mm.yyyy)

Zhang, Lei

Annex I Reason of Extension

Correction of : ---

Modification of : ---

Addition of : ---

Deletion of : ---

Annex II Test results
Appendix 1 Test data

1. Description of the test object

1.1.	Category(ies)	:	i-Size universal ISOFIX i-Size booster seat
1.2.	Size range	:	76 - 150 cm
1.3.	Maximum occupant mass allowed for integral ECRS	:	18 kg
1.4.	CRS orientation	:	76-105cm: forward-facing 100-150cm: forward-facing
1.5.	Class of the retention system	:	76-105cm: integral 100-150cm: non-integral
1.6.	Belt type	:	(adult) three-point belt / ~~(adult) lap belt / special type belt / retractor~~ / ~~not applicable~~
1.7.	ISOFIX size envelope	:	ISO/F2X / ~~ISO/R2~~ / ISO/B2 / ~~not applicable~~
1.8.	Anti-rotation device	:	top-tether / ~~support leg~~ / ~~not applicable~~
1.9.	Class of lock-off device	:	~~A / B~~ / not applicable
1.10.	Shoulder strap positioner	:	~~applicable~~ / not applicable
1.11.	Load limiting device	:	~~applicable~~ / not applicable
1.12.	Type of retractor	:	~~applicable~~ / not applicable
1.13.	Other features	:	chair assembly / ~~impact shield~~
1.14.	Drawings, diagrams and plans of the child restraint, including any retractor, chair assembly, impact shield fitted	:	see manufacturer's information document
1.15.	Declaration on toxicity in accordance with EN 71-3	:	see manufacturer's information document
1.16.	Declaration on flammability in accordance with EN 71-2	:	see manufacturer's information document
1.17.	Instruction for use of CRS in the vehicle	:	see manufacturer's instruction manual
1.18.	Mass of the complete CRS	:	8.5±0.5 kg

2. Test conditions

2.1.	Type of the test sample	:	WG07FIX
2.2.	Test procedures used	:	General specifications described in paragraph 6, tests described in paragraph 7, production qualification described in paragraph 9, compulsory markings and instructions described in paragraphs 4/5/14, according to the requirements of ECE Regulation No. 129
2.3.	Test equipment	:	Used equipments fulfill all requirements of ECE Regulation No. 129
2.4.	Remarks	:	N/A

3. Test results

Following numbering is according to ECE Regulation No. 129 */ marked in italic /*

	Description		Result
4.	*Markings*	:	
4.1.	Manufacturer's name, initials or trade mark	:	pass / ~~fail~~ / ~~not applicable~~
4.2.	Year of production	:	pass / ~~fail~~ / ~~not applicable~~
4.3.	Orientation, size range, maximum occupant mass, adult safety belt path marked by colour coding	:	pass / ~~fail~~ / ~~not applicable~~
4.4.	Airbag warning label for rearward facing ECRS	:	~~pass~~ / ~~fail~~ / not applicable
4.5.	"15 months" warning label in the case of ECRS that can be used forward facing	:	pass / ~~fail~~ / ~~not applicable~~
4.6.	Webbing path	:	pass / ~~fail~~ / ~~not applicable~~
4.7.1.	i-Size logo	:	pass / ~~fail~~ / ~~not applicable~~
4.7.2.	Specific vehicle ISOFIX ECRS	:	~~pass~~ / ~~fail~~ / not applicable
4.7.3.	Approval mark; Its location in case ECRS containing module(s)	:	~~pass~~ / ~~fail~~ / not applicable
4.7.4.	Module mark and its location	:	~~pass~~ / ~~fail~~ / not applicable
4.8.1.	"i-Size booster seat" label	:	pass / ~~fail~~ / ~~not applicable~~

4.8.2.	"Specific vehicle booster seat" label	: ~~pass~~ / ~~fail~~ / not applicable
4.8.3.	"Universal booster cushion" label	: ~~pass~~ / ~~fail~~ / not applicable
4.8.4.	"Specific vehicle booster cushion" label	: ~~pass~~ / ~~fail~~ / not applicable
4.8.5.	"Booster cushion" label	: ~~pass~~ / ~~fail~~ / not applicable
4.9.	"Impact shield" label	: ~~pass~~ / ~~fail~~ / not applicable
4.10.	"Removable insert" label	: pass / ~~fail~~ / ~~not applicable~~
4.11.	"Booster seat removable backrest" label	: ~~pass~~ / ~~fail~~ / not applicable
4.12.	"Stature range" label	: pass / ~~fail~~ / ~~not applicable~~
4.13.1.	"Universal Belted" label	: ~~pass~~ / ~~fail~~ / not applicable
4.13.2.	"Specific vehicle Belted" label	: ~~pass~~ / ~~fail~~ / not applicable
4.13.3.	Approval mark; Its location in case ECRS containing module(s)	: ~~pass~~ / ~~fail~~ / not applicable
4.13.4.	Module mark and its location	: ~~pass~~ / ~~fail~~ / not applicable
4.14.	Additional markings: a) steps needed for making CRS ready for installation; b) position, function and interpretation of any indicator; c) symbols of anti-rotation device; d) adjustment; e) permanently attached and visible to a user; f) reference symbol	: pass / ~~fail~~ / ~~not applicable~~
6.	*General specifications*	
6.1.	Positioning and securing on the vehicle	
6.1.1.	i-Size seating positions … top tether … other i-Size integral ECRS … i-Size booster seat … specific vehicle ISOFIX … specific vehicle booster seat	: pass / ~~fail~~ / ~~not applicable~~
6.1.2.	Integral ECRS shall be secured to vehicle structure or to vehicle seat structure	: pass / ~~fail~~ / ~~not applicable~~

6.1.2.1.	For i-Size, two ISOFIX attachments with an anti-rotation device …	:	pass / ~~fail~~ / ~~not applicable~~
6.1.2.2.	For "Specific Vehicle ISOFIX", … secured to ISOFIX anchorage system as designed by vehicle manufacturer	:	~~pass~~ / ~~fail~~ / not applicable
6.1.2.3.	For the "Universal Belted" category, this shall be by means of the adult safety-belt only	:	~~pass~~ / ~~fail~~ / not applicable
6.1.2.4.	For the "Specific vehicle Belted" category, this shall be primarily by means of the adult safety-belt	:	~~pass~~ / ~~fail~~ / not applicable
6.1.2.5.	Integral Enhanced Child Restraint Systems of the Belted categories shall have a main load-bearing contact point, … not be less than 150mm from Cr axis … all adjustment configurations and variable belt paths	:	~~pass~~ / ~~fail~~ / not applicable Record: --- mm
6.1.2.6.	The adult safety-belt required to secure a Belted Integral Enhanced Child Restraint System … 50±5N … 4±3N …	:	~~pass~~ / ~~fail~~ / not applicable
	Where the retractor belt is used, this condition shall be met with at least 150mm of belt remaining on the spool	:	~~pass~~ / ~~fail~~ / not applicable Record: --- mm
6.1.2.7.	For children under 15 months only lateral or rearward facing shall be used. (a) rearward facing … 83cm; (b) forward facing … 76cm; (c) A convertible seat in its rearward facing … 83 cm. This shall not preclude a child stature greater than 83 cm. Rearward facing may be applied to any age of child	:	pass / ~~fail~~ / ~~not applicable~~
6.1.2.8.	An infant-carrier shall be designed to accommodate children up to 87 cm as a maximum stature	:	~~pass~~ / ~~fail~~ / not applicable

6.1.3.	Non-integral ECRS shall be secured in a vehicle seating position	:	pass / ~~fail~~ / ~~not applicable~~
6.1.3.1.	For i-Size booster seat and Universal booster cushion categories, by means of adult safety seat belt ...	:	pass / ~~fail~~ / ~~not applicable~~
6.1.3.2.	For specific vehicle booster seat and specific vehicle booster cushion categories, by means of adult safety seat belt ...	:	~~pass~~ / ~~fail~~ / not applicable
6.1.3.3.	For non-integral … shall not be granted for a stature below 100cm; … not be approved with an upper stature limit of 105cm or below; Booster seat shall insure lateral protection up to 135cm; … uninterrupted range of child statures	:	pass / ~~fail~~ / ~~not applicable~~
6.1.3.4.	ECRS of the booster seat and booster cushion categories shall have a main load-bearing contact point, … not be less than 150mm from Cr axis … all adjustment configurations and variable belt paths	:	pass / ~~fail~~ / ~~not applicable~~ Record: 195 mm
6.1.3.5.	Adult seat belt required to secure a i-Size booster seat … 50±5N …4±3N …	:	pass / ~~fail~~ / ~~not applicable~~
6.1.3.6.	For booster cushions, type approval shall not be granted for a stature below 125 cm... Booster cushions shall ensure that ... described in Annex 6.	:	~~pass~~ / ~~fail~~ / not applicable
6.2.	Configuration of the CRS		
6.2.1.1.	The restraint of the child shall give the required protection in any position specified	:	pass / ~~fail~~ / ~~not applicable~~

6.2.1.2.	… easily and readily restrained or removed. … a harness belt or a Y-shaped belt without a retractor each shoulder restraint and lap strap … movement relative to each other; … designed with two or more connecting parts	:	pass / ~~fail~~ / ~~not applicable~~
6.2.1.3.	Change in inclination shall not require manual readjustment of any other part. A deliberate hand-action shall be necessary …	:	pass / ~~fail~~ / ~~not applicable~~
6.2.1.4.	To prevent submarining, a crotch strap shall be required on all forward-facing restraints incorporating an integral harness belt system	:	pass / ~~fail~~ / ~~not applicable~~
6.2.1.5.	All restraint devices utilizing a lap strap shall... The assembly shall...; In the case of non-integral ECRS, the angles α and β between the tangent line in which the belt touches the thighs and the horizontal shall be greater than 10°	:	pass / ~~fail~~ / ~~not applicable~~ Record: α1=25.6 α2=23.8 β1=25.3 β2=24.0
6.2.1.6.	For i-Size or specific vehicle booster seats, the lap portion of the adult seat belt … transmitted through the pelvis. The shoulder portion … the child torso and neck do not escape	:	pass / ~~fail~~ / ~~not applicable~~
6.2.1.7.	All straps … discomfort … or assume a dangerous configuration. Y-shaped belts are not permitted on forward facing … only be used in dedicated rearward facing or lateral facing ECRS. The distance between ... appropriate dummy	:	pass / ~~fail~~ / ~~not applicable~~
6.2.1.8.	With the crotch strap attached and in its longest position if adjustable, … not … adjust the lap strap to lie above the pelvis of both the smallest and largest dummy within the size range	:	pass / ~~fail~~ / ~~not applicable~~

6.2.1.9.	During dynamic test, the lap belt shall not ... An assessement shall be carried out...	: pass / ~~fail~~ / ~~not applicable~~
6.2.1.10.	At least the worst case of the dynamic test for the Enhanced Child Restraint System shall be performed after conditioning (para. 7.2.6.)	: pass / ~~fail~~ / ~~not applicable~~
6.2.2.1.	Not exhibit sharp edges or protrusions liable to cause damage to vehicle-seat covers or to occupant's clothing	: pass / ~~fail~~ / ~~not applicable~~
6.2.2.2.	Its rigid parts do not, … exhibit sharp edges capable of abrading the straps	: pass / ~~fail~~ / ~~not applicable~~
6.2.3.	… remove or detach without use of specific tools … avoid any risk of incorrect assembly and use ... Any harness belt shall ...	: pass / ~~fail~~ / ~~not applicable~~
6.2.4.	Special Needs Restraints may have additional restraining devices	: ~~pass~~ / ~~fail~~ / not applicable
6.2.5.	ECRS may be designed for use in any size range provided that it satisfies the requirements	: pass / ~~fail~~ / ~~not applicable~~
6.2.6.	… inflatable elements …the conditions of use (pressure, temperature, humidity) have no influence on their ability to comply with the requirements	: ~~pass~~ / ~~fail~~ / not applicable
6.3.	ECRS specifications	
6.3.1.1.	Declaration on toxicity of materials in conformity with EN 71-3	: pass / ~~fail~~ / ~~not applicable~~ Signed Declaration Received and Test Report Reference: EQO23020205S-C001
6.3.1.2.	Declaration on flammability of materials in conformity with EN 71-2	: pass / ~~fail~~ / ~~not applicable~~ Signed Declaration Received and Test Report Reference: EQO23020205S-T001

6.3.2.1. Internal geometric characteristics in conformity with Annex 18 : pass / ~~fail~~ / ~~not applicable~~

Testing parameter	Unit	Result	Requirement
Configuration Measured	cm	76-150	-
ISO volume used to confirm external dimensions	-	F2x	-
Calculated Stature Range	cm	76 - 105	-
B) Sitting height measurement	cm	58.0 (63.8)	≥61.8
C) Shoulder breadth measurement	cm	36.5	≥30.1
D) Hip breadth measurement	cm	32.3	≥24.9
E1) Min shoulder height measurement	cm	28.2	<28.4
E2) Max shoulder height measurement	cm	40.4	≥39.1
ISO volume used to confirm external dimensions	-	B2	-
Calculated Stature Range	cm	100 - 135	-
B) Sitting height measurement	cm	72.4 (79.6)	≥74.4
C) Shoulder breadth measurement	cm	37.9	≥33.3
D) Hip breadth measurement	cm	32.3	≥29.1
E1) Min shoulder height measurement	cm	28.2	≤32.4
E2) Max shoulder height measurement	cm	49.0	≥47.9
ISO volume used to confirm external dimensions	-	N/A	-
Calculated Stature Range	cm	135-150	-
B) Sitting height measurement	cm	76.8 (84.4)	≥81.1
C) Shoulder breadth measurement	cm	37.9	≥36.4
D) Hip breadth measurement	cm	32.3	≥32.0
E1) Min shoulder height measurement	cm	28.2	≤41.5
E2) Max shoulder height measurement	cm	54.1	≥53.3

6.3.2.2. External dimensions : pass / ~~fail~~ / ~~not applicable~~

Configuration measured	76-105cm
ISO volume used to confirm external dimensions	F2x
ECRS Adjustments that fit within volume	Fulfilled
Head rest position	Position 1-5
Recline position	Upright position
Side wing position	N/A
Verification photos of physical check	Fulfilled
Verification image if checked using CAD drawing	Fulfilled
Configuration measured	100-135cm
ISO volume used to confirm external dimensions	B2
ECRS Adjustments that fit within volume	Fulfilled
Head rest position	Position 1-11
Recline position	Upright position
Side wing position	N/A
Verification photos of physical check	Fulfilled
Verification image if checked using CAD drawing	Fulfilled

6.3.2.3. Mass of an integral ISOFIX ECRS combined with the largest child (≤33 kg) : pass / ~~fail~~ / ~~not applicable~~
Mass of CRS: 8.5kg
Max. Mass of Occupant: 18kg

For module systems the combined mass of the module & base shall be recorded. : ~~pass~~ / ~~fail~~ / not applicable
Mass of System: ---kg

6.3.3.1. Type of ISOFIX attachments : pass / ~~fail~~ / ~~not applicable~~

6.3.3.2. Dimensions of ISOFIX attachments : pass / ~~fail~~ / ~~not applicable~~

6.3.3.3.	Partial latching indication	:	pass / ~~fail~~ / ~~not applicable~~	
	The ISOFIX ECRS shall incorporate means by which ... ISOFIX lower anchorages.	:	latch indicator	[Y/~~N~~]
	The indication means may be audible,	:	check	[Y/~~N~~]
	tactile or	:	check	[~~Y~~/N]
	visual or	:	check	[Y/~~N~~]
	a combination of two or more.	:	check	[Y/~~N~~]
	In case of visual indication, it shall be detectable under all normal lighting conditions.	:	check	[Y/~~N~~]
6.3.4.	ISOFIX ECRS top tether strap specification			
6.3.4.1.	Type of top tether connector	:	pass / ~~fail~~ / ~~not applicable~~	
6.3.4.2.	The ISOFIX top tether strap shall be supported by webbing (or its equivalent), having a provision for adjustment and release of tension.	:	pass / ~~fail~~ / ~~not applicable~~	
6.3.4.2. 1.	ISOFIX Enhanced Child Restraint System top tether strap length shall be at least 2,000 mm.	:	pass / ~~fail~~ / ~~not applicable~~ Record: TT strap length 2380mm	
6.3.4.2. 2.	The ISOFIX top tether strap or the ISOFIX ECRS shall be equipped ... device.	:	pass / ~~fail~~ / ~~not applicable~~	
6.3.4.2. 3.	Engagement dimensions for ISOFIX top tether hooks are shown in Figure 3(c).	:	pass / ~~fail~~ / ~~not applicable~~	
6.3.5.1.	Support-leg and support-leg foot geometrical requirements	:	~~pass~~ / ~~fail~~ / not applicable	

6.3.5.1. The support leg, including its attachment to the ECRS and the support-leg foot shall ... defined as follows : ~~pass~~ / ~~fail~~ / not applicable

Testing parameter	Unit	Result	Requirement
Width in Y	mm	-	≤200
Min Distances in X	mm	-	≥585
Max Distances in X	mm	-	≤695
Min Height in Z	mm	-	≤70
Max Height in Z	mm	-	≤285

6.3.5.2. The support leg foot assessment volume is defined as follows : ~~pass~~ / ~~fail~~ / not applicable

Testing parameter	Unit	Result	Requirement
Adjustment increments	mm	-	≤20
Width in Y	mm	-	≤200
Min Distances in X	mm	-	≥585
Max Distances in X	mm	-	≤695
Min Height in Z	mm	-	≤285
Max Height in Z	mm	-	≥540

6.3.5.3. Support-leg foot dimensions : ~~pass~~ / ~~fail~~ / not applicable

Testing parameter	Unit	Result	Requirement
Contact Surface	mm^2	-	≥2500
Min X’	mm	-	≥30
Min Y’	mm	-	≥30
Min Radius	mm	-	≥3.2

6.3.5.4. Support-leg foot jig or computer simulation : ~~pass~~ / ~~fail~~ / not applicable

6.4. Markings conform to the requirements of paragraph 4 : pass / ~~fail~~ / ~~not applicable~~

6.5. Instructions on installation and instructions for use conform to paragraph 14 : pass / ~~fail~~ / ~~not applicable~~

6.6. Provisions applicable to the assembled ECRS

6.6.1. Resistance to corrosion (NSS, 50 hours) : pass / ~~fail~~ / ~~not applicable~~

Description of parts tested	Result
Buckle, Adjuster, Connector sheet, ISOFIX, ~~Support leg~~, Top tether hook, Metal skeleton	no signs of deterioration likely to impair the proper functioning and no significant corrosion

6.6.2. Energy absorption (mass of 2.75kg, height of 100mm) : pass / ~~fail~~ / ~~not applicable~~

	Head impact area	Result	Requirement
Peak acceleration [g]	Head support middle	20.90	≤ 60
	Head support left	10.98	
	Head support right	10.23	
Depth of side wings [mm] (for rearward-facing device)		-	≥ 90

Note: the height of the adult safety belt or the child harness is directly controlled by the adjustable head support.

6.6.3. Overturning (angle of 540°, speed of 2-5 degrees /s) : pass / ~~fail~~ / ~~not applicable~~

Configuration	Dummy	Head vertical movement [mm]				Requirement
		clockwise	counter-clockwise	roll ahead	roll back	
76 - 105 cm, forward facing, Installation: ISOFIX+Top tether, retention of child: harness	Q1.5 11kg	26	19	16	15	No fully ejected; Head vertical movement ≤ 300mm
	Q3 15kg	11	13	10	15	
100 - 150 cm, forward facing, Installation: ISOFIX+ adult 3-point belt, retention of child: adult 3-point belt	Q3 15kg	29	18	22	20	
	Q6 23kg	56	16	37	36	
	Q10 36kg	34	20	12	11	
100 - 150 cm, forward facing, Installation: adult 3-point belt, retention of child: adult 3-point belt	Q3 15kg	38	26	32	23	
	Q6 23kg	68	47	27	47	
	Q10 36kg	43	28	26	31	

7.1.3. Dynamic test : pass / ~~fail~~ / ~~not applicable~~

Type of dynamic test device : Acceleration / ~~deceleration~~

Deceleration or acceleration curve of frontal or rear impact : fulfilled

Relative velocity curve of lateral impact : fulfilled

Testing parameter		Unit	Result			Requirement
Size range		cm	76 - 105			-
ECRS Configuration		-	integral harness			-
Orientation		-	forward / ~~rearward~~ facing			-
Installation		-	ISOFIX + Top Tether			-
Restraint of dummy		-	harness			-
Backrest position		-	fixed			-
Support leg		-	~~in use~~ / ~~not in use~~ / n.a.			-
Top tether		-	in use / ~~not in use~~ / ~~n.a.~~			-
Impact direction		-	frontal impact			-
Test Reference Number		-	WE-01	-	WE-02	-
Dummy size		-	Q1.5	-	Q3	-
Bar representing the facia		-	-	-	-	-
Installation Belt Forces		N	-	-	-	50 ±5
Total Velocity Change		km/h	51.94	-	51.39	52 +0/-2 (F); ~~32 +2/-0 (R)~~
Head performance criterion		-	268	-	318	≤600/800
Res. Head acceleration 3 ms		g	51.46	-	57.81	≤75/80
Res. Chest acceleration 3 ms		g	47.91	-	41.12	≤55
Chest deflection		mm	16.4	-	29.8	-
Upper neck tension force		N	1508.4	-	1905.2	-
Upper neck flexion moment		Nm	1.26	-	13.91	-
Head displacement	x (horizontal)	mm	293	-	339	≤500
	at time	ms	89	-	96	≤300
	z (vertical)	mm	650	-	693	≤800
	at time	ms	160	-	195	≤300
Exceeding BA / ~~FG~~ (forwards)		-	no	-	no	no
Exceeding DA / ~~FD~~ (upwards)		-	no	-	no	no
Exceeding DE / ~~DE~~ (rearwards)		-	no	-	no	no
Contacting with Ø100mm bar		-	-	-	-	-
Lap belt beyond the pelvic fully		-	no	-	no	no
Buckle opening force under load		N	60	-	61	≤80
Failure or brakeage		-	none	-	none	none
Abdominal pressure		Bar	0.45	-	0.22	≤1.2/1.0
Remark: test with buckle ‘WE05-10‘						

Testing parameter		Unit	Result			Requirement
Size range		cm	76 - 105			-
ECRS Configuration		-	integral harness			-
Orientation		-	forward / ~~rearward~~ facing			~~-~~
Installation		-	ISOFIX + Top Tether			-
Restraint of dummy		-	harness			-
Backrest position		-	fixed			-
Support leg		-	~~in use~~ / ~~not in use~~ / n.a.			-
Top tether		-	in use / ~~not in use~~ / ~~n.a.~~			-
Impact direction		-	frontal impact			~~-~~
Test Reference Number		-	WE-03	-	-	-
Dummy size		-	Q3	-	-	-
Bar representing the facia		-	-	-	-	-
Installation Belt Forces		N	-	-	-	50 ±5
Total Velocity Change		km/h	51.26	-	-	52 +0/-2 (F); ~~32 +2/-0 (R)~~
Head performance criterion		-	378	-	-	≤800
Res. Head acceleration 3 ms		g	62.82	-	-	≤80
Res. Chest acceleration 3 ms		g	41.11	-	-	≤55
Chest deflection		mm	32.8	-	-	-
Upper neck tension force		N	2534.5	-	-	-
Upper neck flexion moment		Nm	18.29	-	-	-
Head displacement	x (horizontal)	mm	336	-	-	≤500
	at time	ms	96	-	-	≤300
	z (vertical)	mm	690	-	-	≤800
	at time	ms	180	-	-	≤300
Exceeding BA / ~~FG~~ (forwards)		-	no	-	-	no
Exceeding DA / ~~FD~~ (upwards)		-	no	-	-	no
Exceeding DE / ~~DE~~ (rearwards)		-	no	-	-	no
Contacting with Ø100mm bar		-	-	-	-	-
Lap belt beyond the pelvic fully		-	no	-	-	no
Buckle opening force under load		N	62	-	-	≤80
Failure or brakeage		-	none	-	-	none
Abdominal pressure		Bar	0.23	-	-	≤1.0
Remark: test with buckle ‘63-1362-xxb‘						

Testing parameter		Unit	Result			Requirement
Size range		cm	76 - 105			-
ECRS Configuration		-	integral harness			-
Orientation		-	forward / ~~rearward~~ facing			~~-~~
Installation		-	ISOFIX + Top Tether			-
Restraint of dummy		-	harness			-
Backrest position		-	fixed			-
Support leg		-	~~in use~~ / ~~not in use~~ / n.a.			-
Top tether		-	in use / ~~not in use~~ / ~~n.a.~~			-
Impact direction		-	frontal impact			~~-~~
Test Reference Number		-	WE-04	-	-	-
Dummy size		-	Q3	-	-	-
Bar representing the facia		-	-	-	-	-
Installation Belt Forces		N	-	-	-	50 ±5
Total Velocity Change		km/h	51.03	-	-	52 +0/-2 (F); ~~32 +2/-0 (R)~~
Head performance criterion		-	362	-	-	≤800
Res. Head acceleration 3 ms		g	63.04	-	-	≤80
Res. Chest acceleration 3 ms		g	42.05	-	-	≤55
Chest deflection		mm	31.2	-	-	-
Upper neck tension force		N	2143.7	-	-	-
Upper neck flexion moment		Nm	19.08	-	-	-
Head displacement	x (horizontal)	mm	341	-	-	≤500
	at time	ms	93	-	-	≤300
	z (vertical)	mm	686	-	-	≤800
	at time	ms	178	-	-	≤300
Exceeding BA / ~~FG~~ (forwards)		-	no	-	-	no
Exceeding DA / ~~FD~~ (upwards)		-	no	-	-	no
Exceeding DE / ~~DE~~ (rearwards)		-	no	-	-	no
Contacting with Ø100mm bar		-	-	-	-	-
Lap belt beyond the pelvic fully		-	no	-	-	no
Buckle opening force under load		N	59	-	-	≤80
Failure or brakeage		-	none	-	-	none
Abdominal pressure		Bar	0.24	-	-	≤1.0
Remark: test with buckle ‘63-4959-xxb‘						

Testing parameter		Unit	Result			Requirement
Size range		cm	76 - 105			-
ECRS Configuration		-	integral harness			-
Orientation		-	forward / ~~rearward~~ facing			~~-~~
Installation		-	ISOFIX			-
Restraint of dummy		-	harness			-
Backrest position		-	fixed			-
Support leg		-	~~in use~~ / ~~not in use~~ / n.a.			-
Top tether		-	~~in use~~ / not in use / ~~n.a.~~			-
Impact direction		-	frontal impact			~~-~~
Test Reference Number		-	WE-05	-	-	-
Dummy size		-	Q3	-	-	-
Bar representing the facia		-	-	-	-	-
Installation Belt Forces		N	-	-	-	50 ±5
Total Velocity Change		km/h	51.90	-	-	52 +0/-2 (F); ~~32 +2/-0 (R)~~
Head performance criterion		-	434	-	-	≤800
Res. Head acceleration 3 ms		g	67.57	-	-	≤80
Res. Chest acceleration 3 ms		g	35.80	-	-	≤55
Chest deflection		mm	31.7	-	-	-
Upper neck tension force		N	1935.7	-	-	-
Upper neck flexion moment		Nm	10.43	-	-	-
Head displacement	x (horizontal)	mm	474	-	-	≤550
	at time	ms	102	-	-	≤300
	z (vertical)	mm	722	-	-	≤800
	at time	ms	211	-	-	≤300
Exceeding BA / ~~FG~~ (forwards)		-	no	-	-	no
Exceeding DA / ~~FD~~ (upwards)		-	no	-	-	no
Exceeding DE / ~~DE~~ (rearwards)		-	no	-	-	no
Contacting with Ø100mm bar		-	-	-	-	-
Lap belt beyond the pelvic fully		-	no	-	-	no
Buckle opening force under load		N	61	-	-	≤80
Failure or brakeage		-	none	-	-	none
Abdominal pressure		Bar	0.23	-	-	≤1.0
Remark: Misuse test with buckle ‘63-4959-xxb‘						

Testing parameter		Unit	Result			Requirement
Size range		cm	100 - 150			-
ECRS Configuration		-	non-integral booster seat			-
Orientation		-	forward / ~~rearward~~ facing			-
Installation		-	ISOFIX + adult 3-point belt			-
Restraint of dummy		-	adult 3-point belt			-
Backrest position		-	fixed			-
Support leg		-	~~in use~~ / ~~not in use~~ / n.a.			-
Top tether		-	~~in use~~ / ~~not in use~~ / n.a.			-
Impact direction		-	frontal impact			-
Test Reference Number		-	WE-06	-	WE-08	-
Dummy size		-	Q3	-	Q10	-
Bar representing the facia		-	-	-	-	-
Installation Belt Forces	Load cell 1	N	50	-	52	50 ±5
	Load cell 2		51	-	49	
Total Velocity Change		km/h	51.68	-	51.28	52 +0/-2 (F); ~~32 +2/-0 (R)~~
Head performance criterion		-	550	-	561	≤800
Res. Head acceleration 3 ms		g	71.85	-	78.39	≤80
Res. Chest acceleration 3 ms		g	35.41	-	34.74	≤55
Chest deflection		Mm	38.3	-	40.5	-
Upper neck tension force		N	2896.0	-	4492.3	-
Upper neck flexion moment		Nm	20.03	-	54.66	-
Head displacement	x (horizontal)	mm	353	-	356	≤500/550
	at time	ms	86	-	98	≤300
	z (vertical)	mm	680	-	797	≤800/840
	at time	ms	186	-	10	≤300
Exceeding BA / ~~FG~~ (forwards)		-	no	-	no	no
Exceeding DA / ~~FD~~ (upwards)		-	no	-	no	no
Exceeding DE / ~~DE~~ (rearwards)		-	no	-	no	no
Contacting with Ø100mm bar		-	-	-	-	-
Lap belt beyond the pelvic fully		-	no	-	no	no
Buckle opening force under load		N	-	-	-	≤80
Failure or brakeage		-	none	-	none	none
Abdominal pressure		Bar	0.38	-	0.61	≤1.0/1.2
Remark: n/a						

Testing parameter		Unit	Result			Requirement
Size range		cm	100 - 150			-
ECRS Configuration		-	non-integral booster seat			-
Orientation		-	forward / ~~rearward~~ facing			-
Installation		-	adult 3-point belt			-
Restraint of dummy		-	adult 3-point belt			-
Backrest position		-	fixed			-
Support leg		-	~~in use~~ / ~~not in use~~ / n.a.			-
Top tether		-	~~in use~~ / ~~not in use~~ / n.a.			-
Impact direction		-	frontal impact			-
Test Reference Number		-	WE-07	-	WE-09	-
Dummy size		-	Q3	-	Q10	-
Bar representing the facia		-	-	-	-	-
Installation Belt Forces	Load cell 1	N	51	-	54	50 ±5
	Load cell 2		46	-	48	
Total Velocity Change		km/h	51.82	-	51.83	52+0/-2 (F); ~~32 +2/-0 (R)~~
Head performance criterion		-	555	-	435	≤800
Res. Head acceleration 3 ms		g	71.67	-	67.11	≤80
Res. Chest acceleration 3 ms		g	35.40	-	31.59	≤55
Chest deflection		mm	36.8	-	53.0	-
Upper neck tension force		N	2940.3	-	3895.7	-
Upper neck flexion moment		Nm	23.69	-	25.90	-
Head displacement	x (horizontal)	mm	350	-	362	≤500/550
	at time	ms	85	-	97	≤300
	z (vertical)	mm	695	-	805	≤800/840
	at time	ms	190	-	8	≤300
Exceeding BA / ~~FG~~ (forwards)		-	no	-	no	no
Exceeding DA / ~~FD~~ (upwards)		-	no	-	no	no
Exceeding DE / ~~DE~~ (rearwards)		-	no	-	no	no
Contacting with Ø100mm bar		-	-	-	-	-
Lap belt beyond the pelvic fully		-	no	-	no	no
Buckle opening force under load		N	-	-	-	≤80
Failure or brakeage		-	none	-	none	none
Abdominal pressure		Bar	0.37	-	0.44	≤1.0/1.2
Remark: n/a						

Testing parameter		Unit	Result			Requirement
Size range		cm	100 - 150			-
ECRS Configuration		-	non-integral booster seat			-
Orientation		-	forward / ~~rearward~~ facing			-
Installation		-	ISOFIX + adult 3-point belt + Top Tether			-
Restraint of dummy		-	adult 3-point belt			-
Backrest position		-	fixed			-
Support leg		-	~~in use~~ / ~~not in use~~ / n.a.			-
Top tether		-	~~in use~~ / ~~not in use~~ / n.a.			-
Impact direction		-	frontal impact			-
Test Reference Number		-	WE-10	-	-	-
Dummy size		-	Q10	-	-	-
Bar representing the facia		-	-	-	-	-
Installation Belt Forces	Load cell 1	N	48	-	-	50 ±5
	Load cell 2		45	-	-	
Total Velocity Change		km/h	51.46	-	-	52+0/-2 (F); ~~32 +2/-0 (R)~~
Head performance criterion		-	259	-	-	≤800
Res. Head acceleration 3 ms		g	53.80	-	-	≤80
Res. Chest acceleration 3 ms		g	33.88	-	-	≤55
Chest deflection		mm	65.3	-	-	-
Upper neck tension force		N	3050.2	-	-	-
Upper neck flexion moment		Nm	22.13	-	-	-
Head displacement	x (horizontal)	mm	354	-	-	≤500/550
	at time	ms	93	-	-	≤300
	z (vertical)	mm	802	-	-	≤800/840
	at time	ms	10	-	-	≤300
Exceeding BA / ~~FG~~ (forwards)		-	no	-	-	no
Exceeding DA / ~~FD~~ (upwards)		-	no	-	-	no
Exceeding DE / ~~DE~~ (rearwards)		-	no	-	-	no
Contacting with Ø100mm bar		-	-	-	-	-
Lap belt beyond the pelvic fully		-	no	-	-	no
Buckle opening force under load		N	-	-	-	≤80
Failure or brakeage		-	none	-	-	none
Abdominal pressure		Bar	0.43	-	-	≤1.0/1.2
Remark: misuse test with Top Tether						

Testing parameter	Unit	Result			Requirement
Size range	cm	76 - 105			-
ECRS Configuration	-	integral harness			-
Orientation	-	forward / ~~rearward~~ facing			~~-~~
Installation	-	ISOFIX + Top Tether			-
Restraint of dummy	-	harness			-
Backrest position	-	fixed			-
Support leg	-	~~in use~~ / ~~not in use~~ / n.a.			-
Top tether	-	in use / ~~not in use~~ / ~~n.a.~~			-
Impact direction	-	lateral impact			~~-~~
Test Reference Number	-	WE-11	WE-12	-	-
Dummy size	-	Q1.5	Q3	-	-
Installation Belt Forces	N	-	-	-	50 ±5
Relative velocity	m/s	7.12	7.16	-	6.375-7.25
Side protection position	-	yes	yes	-	Head centre
Head contact with door panel	-	no	no	-	no
Exceeding the red line	-	no	no	-	no
Head performance criterion	-	306	320	-	≤600/800
Res. Head acceleration 3 ms	g	62.99	62.98	-	≤75/80
Upper neck tension force	N	688.0	880.6	-	-
Upper neck flexion moment	Nm	8.39	7.11	-	-
Lap belt beyond the pelvic fully	-	no	no	-	no
Buckle releasing force after test	N	62	59	-	≤80
Failure or brakeage	-	none	none	-	none
Remark: n/a					

Testing parameter	Unit	Result			Requirement
Size range	cm	76 - 105			-
ECRS Configuration	-	integral harness			-
Orientation	-	forward / ~~rearward~~ facing			-
Installation	-	ISOFIX + Top Tether			-
Restraint of dummy	-	harness			-
Backrest position	-	fixed			-
Support leg	-	~~in use~~ / ~~not in use~~ / n.a.			-
Top tether	-	in use / ~~not in use~~ / ~~n.a.~~			-
Impact direction	-	lateral impact			-
Test Reference Number	-	WE-13	-	-	-
Dummy size	-	Q1.5	-	-	-
Installation Belt Forces	N	-	-	-	50 ±5
Relative velocity	m/s	7.14	-	-	6.375-7.25
Side protection position	-	yes	-	-	Head centre
Head contact with door panel	-	no	-	-	no
Exceeding the red line	-	no	-	-	no
Head performance criterion	-	341	-	-	≤600
Res. Head acceleration 3 ms	g	64.14	-	-	≤75
Upper neck tension force	N	743.6	-	-	-
Upper neck flexion moment	Nm	10.54	-	-	-
Lap belt beyond the pelvic fully	-	no	-	-	no
Buckle releasing force after test	N	58	-	-	≤80
Failure or brakeage	-	none	-	-	none
Remark: test with small side protection					

Testing parameter	Unit	Result			Requirement
Size range	cm	76 - 105			-
ECRS Configuration	-	integral harness			-
Orientation	-	forward / ~~rearward~~ facing			-
Installation	-	ISOFIX + Top Tether			-
Restraint of dummy	-	harness			-
Backrest position	-	fixed			-
Support leg	-	~~in use~~ / ~~not in use~~ / n.a.			-
Top tether	-	in use / ~~not in use~~ / ~~n.a.~~			-
Impact direction	-	lateral impact			-
Test Reference Number	-	WE-14	-	-	-
Dummy size	-	Q1.5	-	-	-
Installation Belt Forces	N	-	-	-	50 ±5
Relative velocity	m/s	7.15	-	-	6.375-7.25
Side protection position	-	yes	-	-	Head centre
Head contact with door panel	-	no	-	-	no
Exceeding the red line	-	no	-	-	no
Head performance criterion	-	302	-	-	≤600
Res. Head acceleration 3 ms	g	62.80	-	-	≤75
Upper neck tension force	N	823.5	-	-	-
Upper neck flexion moment	Nm	10.38	-	-	-
Lap belt beyond the pelvic fully	-	no	-	-	no
Buckle releasing force after test	N	59	-	-	≤80
Failure or brakeage	-	none	-	-	none
Remark: test with large side protection					

Testing parameter		Unit	Result			Requirement
Size range		cm	100-150			-
ECRS Configuration		-	non-integral booster seat			-
Orientation		-	forward / ~~rearward~~ facing			-
Installation		-	ISOFIX + adult 3-point belt			-
Restraint of dummy		-	adult 3-point belt			-
Backrest position		-	fixed			-
Support leg		-	~~in use~~ / ~~not in use~~ / n.a.			-
Top tether		-	~~in use~~ / ~~not in use~~ / n.a.			-
Impact direction		-	lateral impact			-
Test Reference Number		-	WE-15	BS-17	BS-19	-
Dummy size		-	Q3	Q6	Q10	-
Installation Belt Forces	Load cell 1	N	49	53	49	50 ±5
	Load cell 2		51	52	50	
Relative velocity		m/s	7.24	7.13	7.22	6.375-7.25
Side protection position		-	yes	yes	yes	Head centre
Head contact with door panel		-	no	no	no	no
Exceeding the red line		-	no	no	no	no
Head performance criterion		-	270	221	93	≤800
Res. Head acceleration 3 ms		g	58.15	52.13	37.20	≤80
Upper neck tension force		N	964.9	1432.3	1738.0	-
Upper neck flexion moment		Nm	9.17	13.94	0.44	-
Lap belt beyond the pelvic fully		-	no	no	no	no
Buckle releasing force after test		N	-	-	-	≤80
Failure or brakeage		-	none	none	none	None
Remark: n/a						

Testing parameter		Unit	Result			Requirement
Size range		cm	100-150			-
ECRS Configuration		-	non-integral booster seat			-
Orientation		-	forward / ~~rearward~~ facing			-
Installation		-	adult 3-point belt			-
Restraint of dummy		-	adult 3-point belt			-
Backrest position		-	fixed			-
Support leg		-	~~in use~~ / ~~not in use~~ / n.a.			-
Top tether		-	~~in use~~ / ~~not in use~~ / n.a.			-
Impact direction		-	lateral impact			-
Test Reference Number		-	WE-16	BS-18	BS-20	-
Dummy size		-	Q3	Q6	Q10	-
Installation Belt Forces	Load cell 1	N	48	49	52	50 ±5
	Load cell 2		51	53	54	
Relative velocity		m/s	7.21	7.14	7.13	6.375-7.25
Side protection position		-	yes	yes	yes	Head centre
Head contact with door panel		-	no	no	no	no
Exceeding the red line		-	no	no	no	no
Head performance criterion		-	275	191	115	≤800
Res. Head acceleration 3 ms		g	58.93	47.81	42.42	≤80
Upper neck tension force		N	966.6	1513.7	1808.9	-
Upper neck flexion moment		Nm	8.31	13.55	33.49	-
Lap belt beyond the pelvic fully		-	no	no	no	no
Buckle releasing force after test		N	-	-	-	≤80
Failure or brakeage		-	none	none	none	None
Remark: n/a						

6.6.5. Resistance to temperature : pass / ~~fail~~ / ~~not applicable~~

	Result	Requirement
☒ Buckle ☐ Retractor ☒ Adjuster ☐ Lock-off device	No signs of deterioration likely to impair the proper functioning	No signs of deterioration likely to impair the proper functioning

6.7. Provisions applicable to individual components of the restraint

6.7.1. Buckle

6.7.1.1. To preclude any incorrect manipulation, not possible to exchange the buckle parts, contact width : pass / ~~fail~~ / ~~not applicable~~

6.7.1.2. Remain closed. Easy to operate and to grasp. Open it by pressure on a button : pass / ~~fail~~ / ~~not applicable~~

Buckle type	Button		Result	Requirement
WE05-10	☐enclosed	Width [mm]	-	≥ 15
		Area [cm²]	-	≥ 4.5
	☒non-enclosed	Width [mm]	10.8	≥ 10
		Area [cm²]	2.96	≥ 2.5
63-1362-xxb	☐enclosed	Width [mm]	-	≥ 15
		Area [cm²]	-	≥ 4.5
	☒non-enclosed	Width [mm]	10.9	≥ 10
		Area [cm²]	3.10	≥ 2.5
63-4959-xxb	☐enclosed	Width [mm]	-	≥ 15
		Area [cm²]	-	≥ 4.5
	☒non-enclosed	Width [mm]	10.5	≥ 10
		Area [cm²]	2.95	≥ 2.5

6.7.1.3. The release area shall be coloured red, no other part of the buckle shall be of this colour : pass / ~~fail~~ / ~~not applicable~~

6.7.1.4. A single operation on a single buckle. Allowed to remove the child together with devices such as infant carrier/carry-cot if CRS can be released by operation of a maximum of two release buttons : pass / ~~fail~~ / ~~not applicable~~

	Result	Requirement
Force to fasten the shoulder strap positioner [N]	-	≤ 15
Force to release the shoulder strap positioner [N]	-	≤ 15
Height of the shoulder strap positioner [mm]	-	≤ 60

6.7.1.5. Opening the buckle shall enable the child to be removed independently : pass / ~~fail~~ / ~~not applicable~~

6.7.1.6. 5000 ± 5 cycles before dynamic test : pass / ~~fail~~ / ~~not applicable~~

6.7.1.7. Buckle opening force : pass / ~~fail~~ / ~~not applicable~~

Buckle type	Test	Result	Requirement
WE05-10	Under load	61	≤ 80 N
	No load	66	40~80 N
63-1362-xxb	Under load	62	≤ 80 N
	No load	52	40~80 N
63-4959-xxb	Under load	59	≤ 80 N
	No load	58	40~80 N

6.7.1.8. Strength of the buckle : pass / ~~fail~~ / ~~not applicable~~

Buckle type	Sample	Result	Requirement
WE05-10	No. 1	20621N	4kN if the mass limit ≤ 13kg; 10kN if the mass limit > 13kg
	No. 2	23455N	
63-1362-xxb	No. 1	14049N	4kN if the mass limit ≤ 13kg; 10kN if the mass limit > 13kg
	No. 2	15434N	
63-4959-xxb	No. 1	20208N	4kN if the mass limit ≤ 13kg; 10kN if the mass limit > 13kg
	No. 2	22624N	

6.7.2. Adjusting device

6.7.2.1. Range of adjustment : pass / ~~fail~~ / ~~not applicable~~

6.7.2.2. Quick adjuster : pass / ~~fail~~ / ~~not applicable~~

6.7.2.3. Easy to reach : pass / ~~fail~~ / ~~not applicable~~

6.7.2.4. Force to operate a manual adjusting device : pass / ~~fail~~ / ~~not applicable~~

		Result	Requirement
Force [N]	Pull out	28	≤ 50
	Pull in	31	

6.7.2.5. Microslip test : pass / ~~fail~~ / ~~not applicable~~

		Result	Requirement
Microslip [mm]	Sample 1	0	≤ 25
	Sample 2	0	

6.7.2.6. No broken or detached when ease of adjustment : pass / ~~fail~~ / ~~not applicable~~

6.7.2.7. 5000 ± 5 cycles before dynamic test : pass / ~~fail~~ / ~~not applicable~~

6.7.3. Retractors : ~~pass~~ / ~~fail~~ / not applicable

6.7.4. Straps : pass / ~~fail~~ / ~~not applicable~~

Specification: 25mm, Gray

	Sample	Result	Requirement
Width of strap [mm]	1	25	≥ 25 / ~~38~~
	2	25	
Strength after room conditioning [kN]	1	13.87	≥ 3.6 / ~~5.0~~ / ~~7.2~~
	2	13.98	
Difference between F1 and F2 in percent of greater value [%]	-	0.8	≤ 10
75% of average of F1 and F2 [kN]	-	10.444	-
Strength after light conditioning [kN]	3	10.85	≥ 10.444
	4	11.27	
Strength after cold conditioning [kN]	5	13.67	
	6	13.86	
Strength after heat conditioning [kN]	7	13.28	
	8	13.48	
Strength after exposure to water [kN]	9	13.74	
	10	13.76	
Strength after abrasion conditioning [kN]	11	-	
	12	-	

Specification: 38mm, Grey

	Sample	Result	Requirement
Width of strap [mm]	1	38	≥ 25 / ~~38~~
	2	38	
Strength after room conditioning [kN]	1	20.74	≥ 3.6 / ~~5.0~~ / ~~7.2~~
	2	21.19	
Difference between F1 and F2 in percent of greater value [%]	-	2.1	≤ 10
75% of average of F1 and F2 [kN]	-	15.724	-
Strength after light conditioning [kN]	3	17.04	≥ 15.724
	4	19.06	
Strength after cold conditioning [kN]	5	20.35	
	6	21.49	
Strength after heat conditioning [kN]	7	19.75	
	8	21.14	
Strength after exposure to water [kN]	9	21.11	
	10	21.44	
Strength after abrasion conditioning [kN]	11	18.63	
	12	18.23	

6.7.5. ISOFIX attachment specifications

6.7.5.1. 2000 ± 5 cycles before dynamic test : pass / ~~fail~~ / ~~not applicable~~

6.7.5.2. Locking mechanism of ISOFIX attachment : pass / ~~fail~~ / ~~not applicable~~

Type	Result	Requirement
(a)	Two consecutive actions	Two consecutive actions
~~(b)~~	~~Opening force = -N~~	~~Opening force ≥ 50N~~

6.7.6. Lock-off device

6.7.6.1. The lock-off device shall be permanently attached to the Enhanced Child Restraint System. : ~~pass~~ / ~~fail~~ / not applicable

6.7.6.2. The lock-off device shall not impair the durability of the adult belt and shall undergo the temperature test operation requirements given in paragraph 7.2.7.1. : ~~pass~~ / ~~fail~~ / not applicable

6.7.6.3. The lock-off device shall not prevent the rapid release of the child. : ~~pass~~ / ~~fail~~ / not applicable

6.7.6.4. Class A Device : ~~pass~~ / ~~fail~~ / not applicable
The amount of slip of the webbing shall not exceed 25mm after the test prescribed in Paragraph 7.2.9.1. below.

6.7.6.5. Class B Device : ~~pass~~ / ~~fail~~ / not applicable
The amount of slip of the webbing shall not exceed 25mm after the test prescribed in Paragraph 7.2.9.2. below.

6.8. ECRS may cover any size range : pass / ~~fail~~ / ~~not applicable~~

9. Production qualification

9.1. Tests to qualify production : pass / ~~fail~~ / ~~not applicable~~

9.2. Qualifying the production of CRS

9.2.1. Dynamic tests for frontal and rear impact : pass / ~~fail~~ / ~~not applicable~~

Testing parameter		Result					Requirement
CRS orientation		forward / ~~rearward~~ facing					-
Installation		adult 3-point belt					-
Restraint of dummy		adult 3-point belt					-
Backrest position		fixed					-
Support leg		~~in use~~ / ~~not in use~~ / n.a.					-
Top tether		~~in use~~ / ~~not in use~~ / n.a.					-
Type of test device		acceleration / ~~deceleration~~					-
Impact direction		frontal / ~~rear~~ impact					-
Dummy size		Q10					-
Test Reference Number		WE-21	WE-22	WE-23	WE-24	WE-25	-
Dashboard bar		-	-	-	-	-	-
Installation Belt Forces	Load cell 1	48	50	50	49	50	50 ±5
	Load cell 2	46	48	49	47	46	
Total Velocity Change [km/h]		51.55	51.54	51.39	51.32	51.19	52 +0/-2 (F)
Head performance criterion		220	313	242	267	280	≤ 800
Res. head 3ms [g]		47.94	57.73	51.25	54.25	54.46	≤ 80
Res. chest 3ms [g]		29.82	30.63	31.46	32.12	30.94	≤ 55
Abdominal pressure [Bar]		0.76	0.56	0.57	0.47	0.58	≤ 1.2
Fz [N]		2836.9	3297.3	2927.4	3085.3	3172.2	-
My [Nm]		8.66	13.20	9.77	16.31	8.25	-
Horizontal head excursion [mm /ms]		363 /99	351 /97	362 /99	350 /97	347 /98	≤ 1.05L(1), L = 500
Vertical head excursion [mm /ms]		802 /10	803 /8	805 /10	803 /10	804 /10	≤ 840
Lap belt (6.2.1.8)		no	no	no	no	no	no
Buckle opening force under load [N]		-	-	-	-	-	≤ 80
Failure or brakeage		none	none	none	none	none	none
Mean of values X		355					-
Standard deviation S		6					-
X + S		361					≤ L, L = 500

(1) L = the limit value prescribed

9.2.2.	Dynamic tests for lateral impact:	: ~~pass~~ / ~~fail~~ / not applicable
9.2.3.	Control of markings:	: pass / ~~fail~~ / ~~not applicable~~
14.	Information for users	
14.1.	Instructions in the language of the country where the device is sold:	: pass / ~~fail~~ / ~~not applicable~~
14.2.	Instructions on installation:	: pass / ~~fail~~ / ~~not applicable~~
14.3.	Instructions for use:	: pass / ~~fail~~ / ~~not applicable~~
4.	**Place and date of the test**	: Eqo Testing and Certification Co., Ltd., Kunshan, P.R. China 18.02.2023 to 16.03.2023 (dd.mm.yyyy)

Annex II Test results
Appendix 2 Acceleration curve

1 WE-01

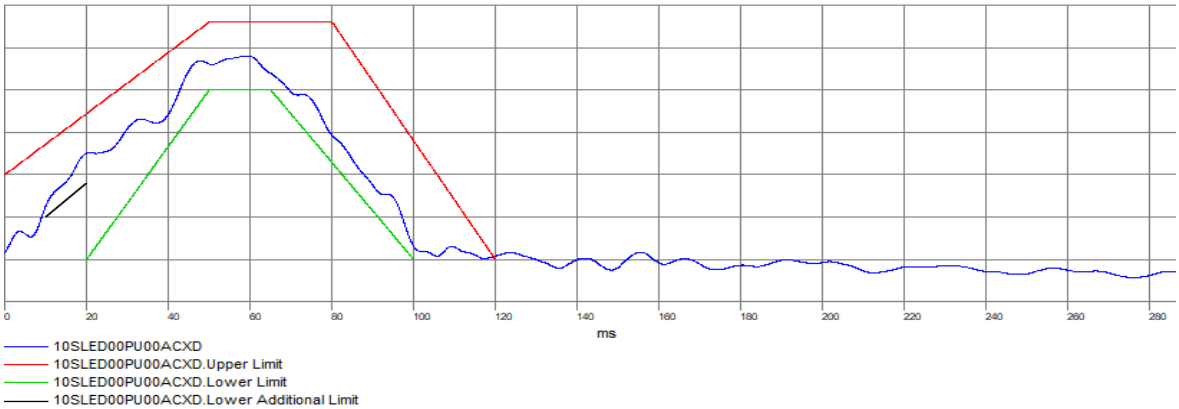

2 WE-02

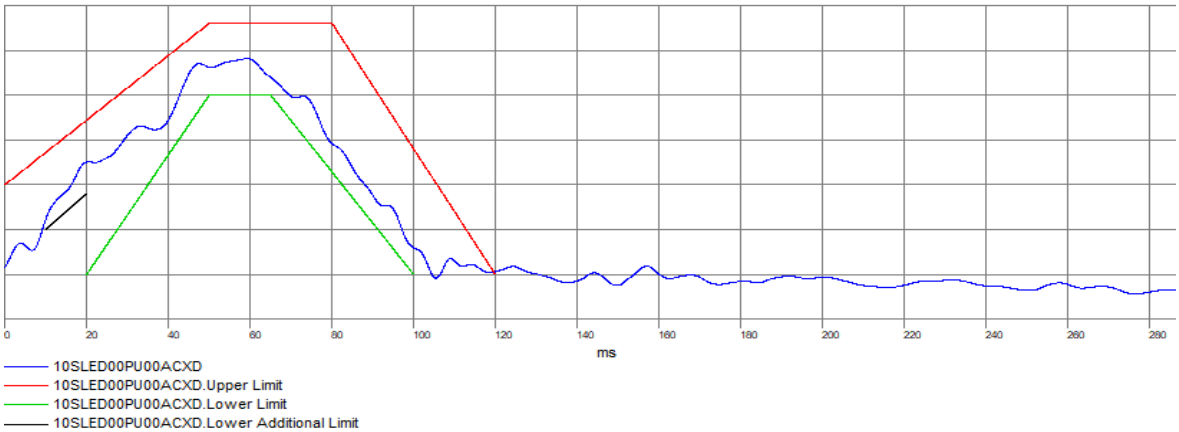

3 WE-03

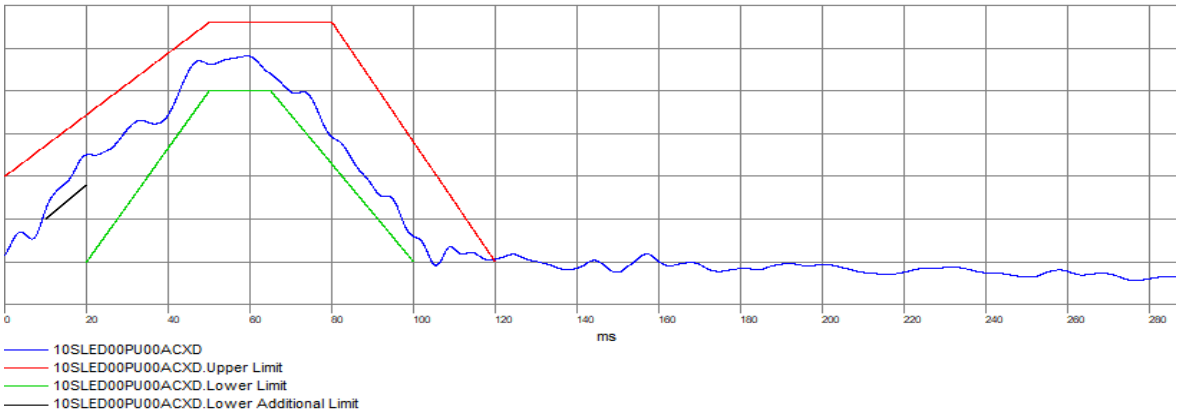

4 WE-04

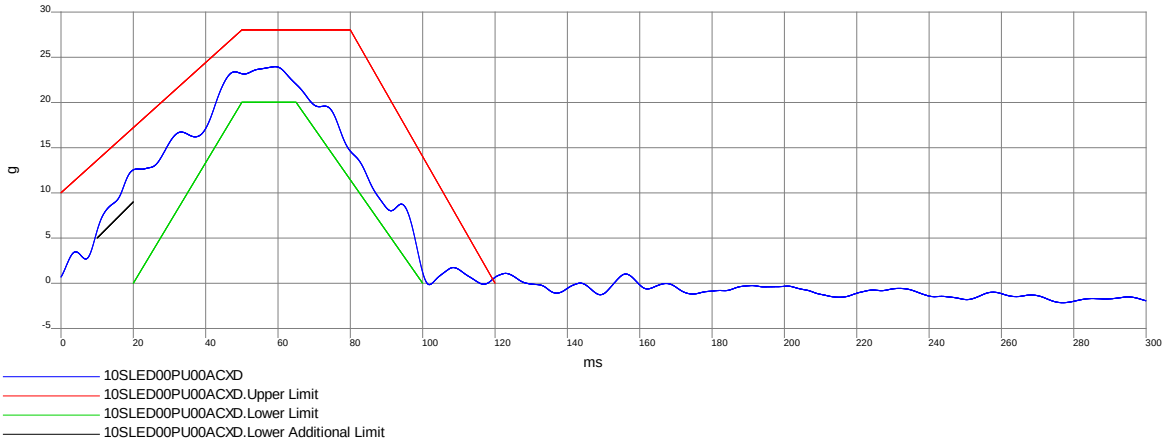

5 WE-05

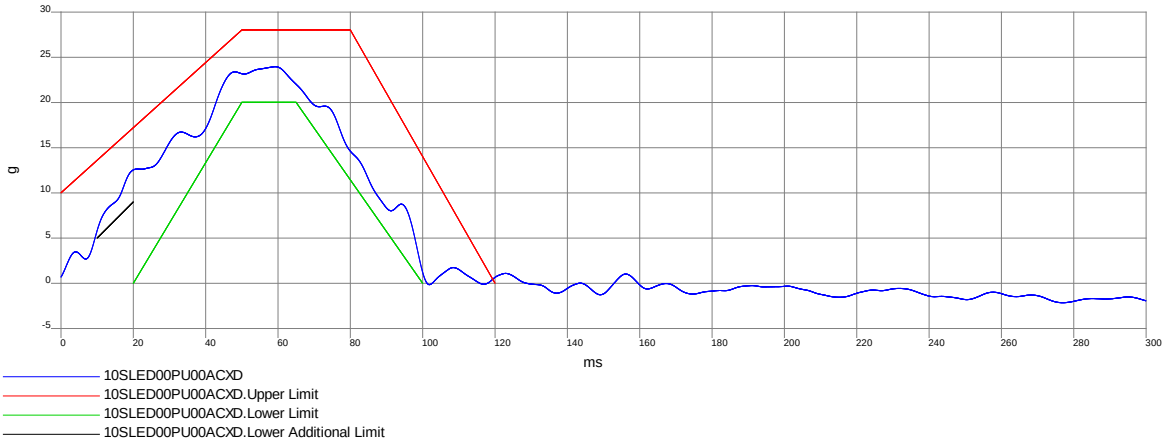

6 WE-06

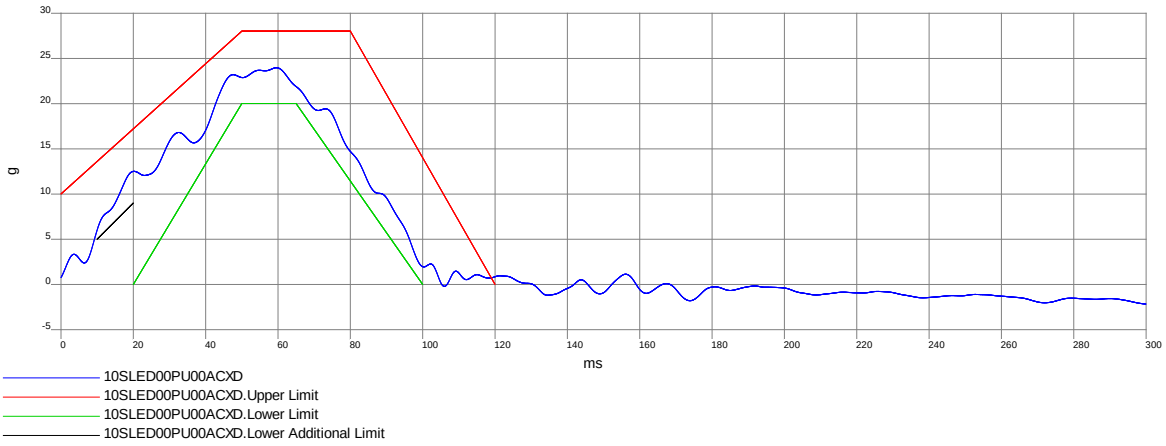

7 WE-07

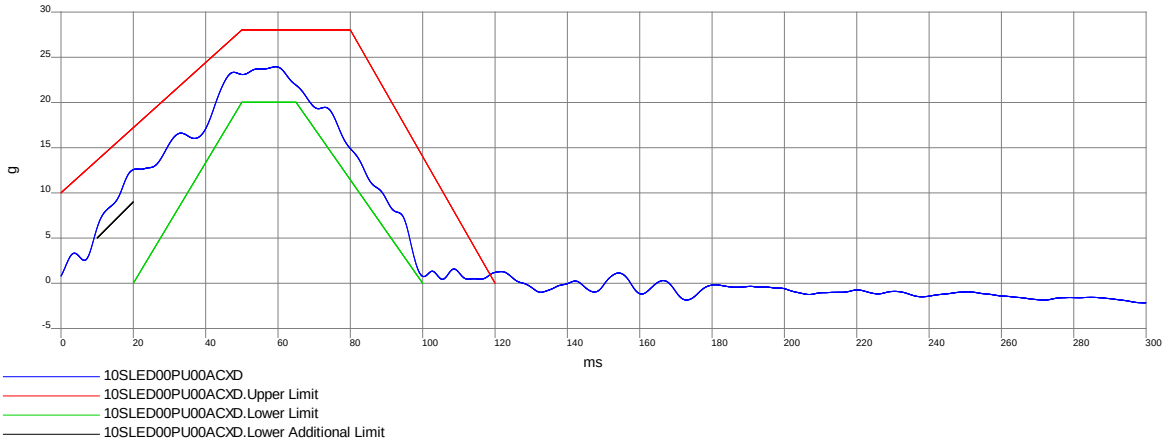

8 WE-08

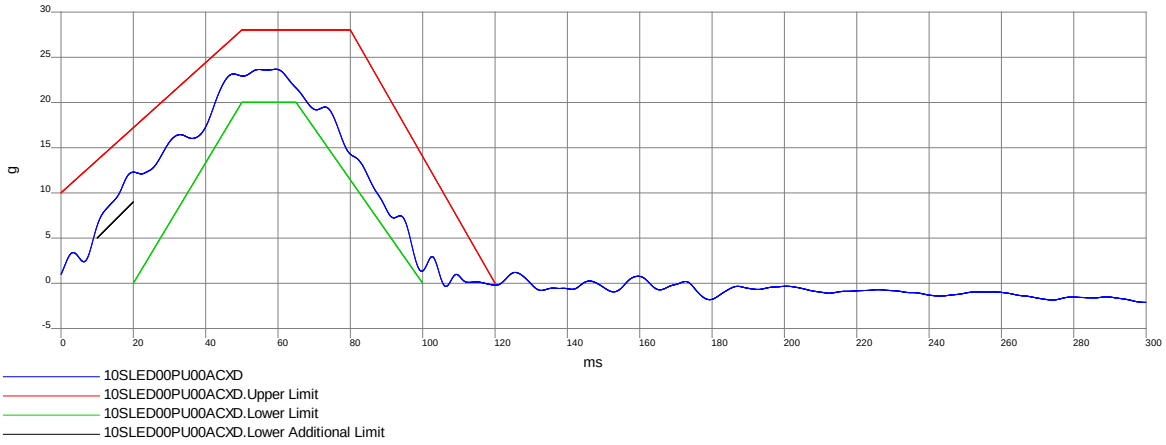

9 WE-09

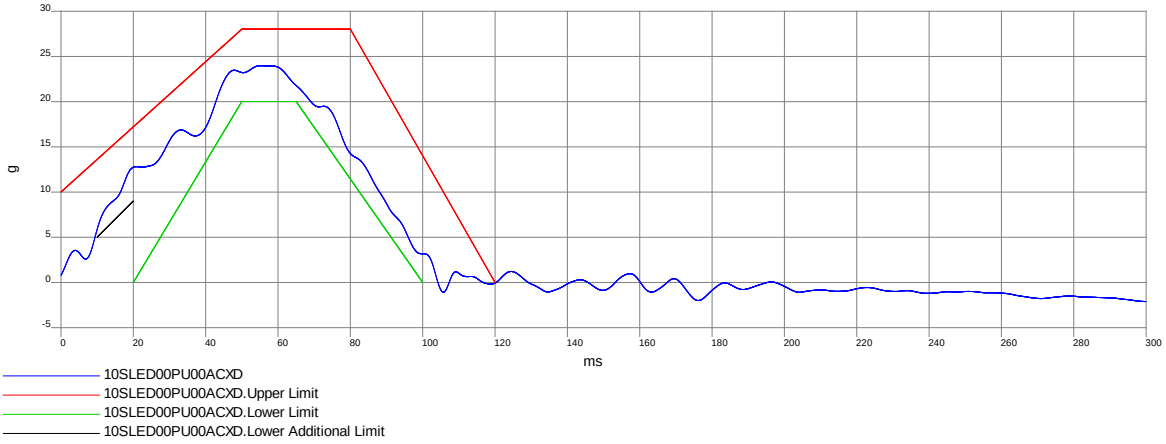

10 WE-10

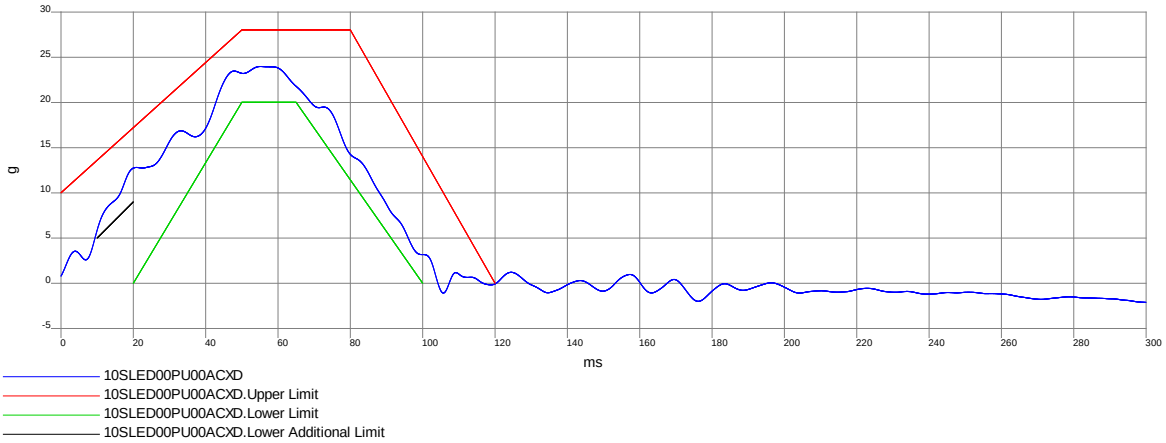

11 WE-11

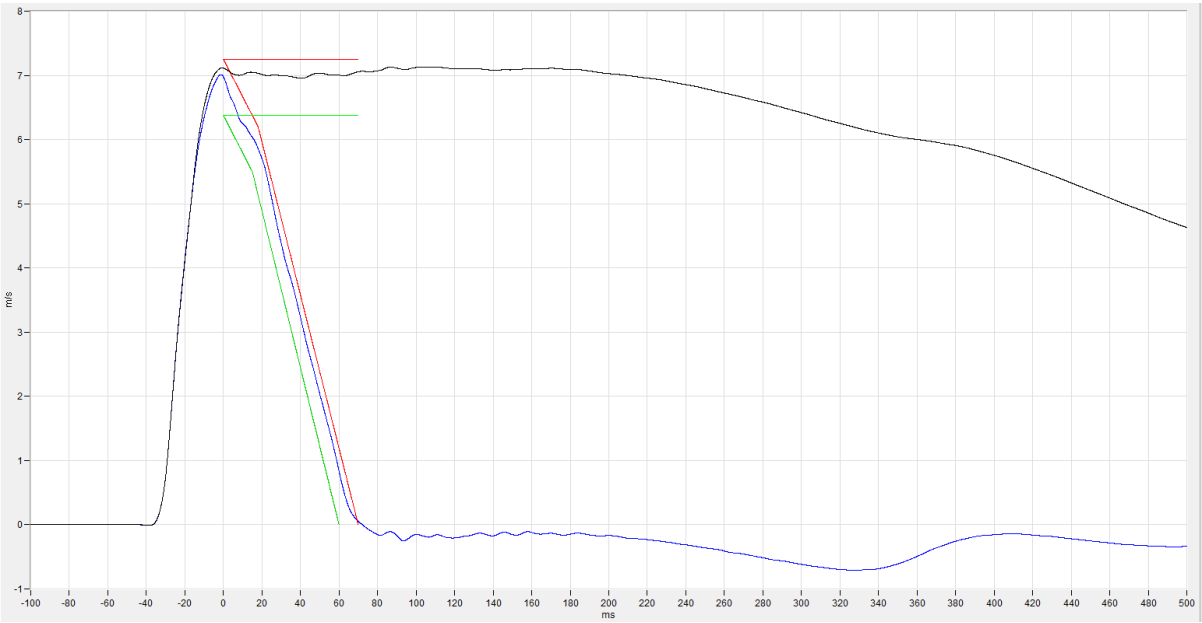

12 WE-12

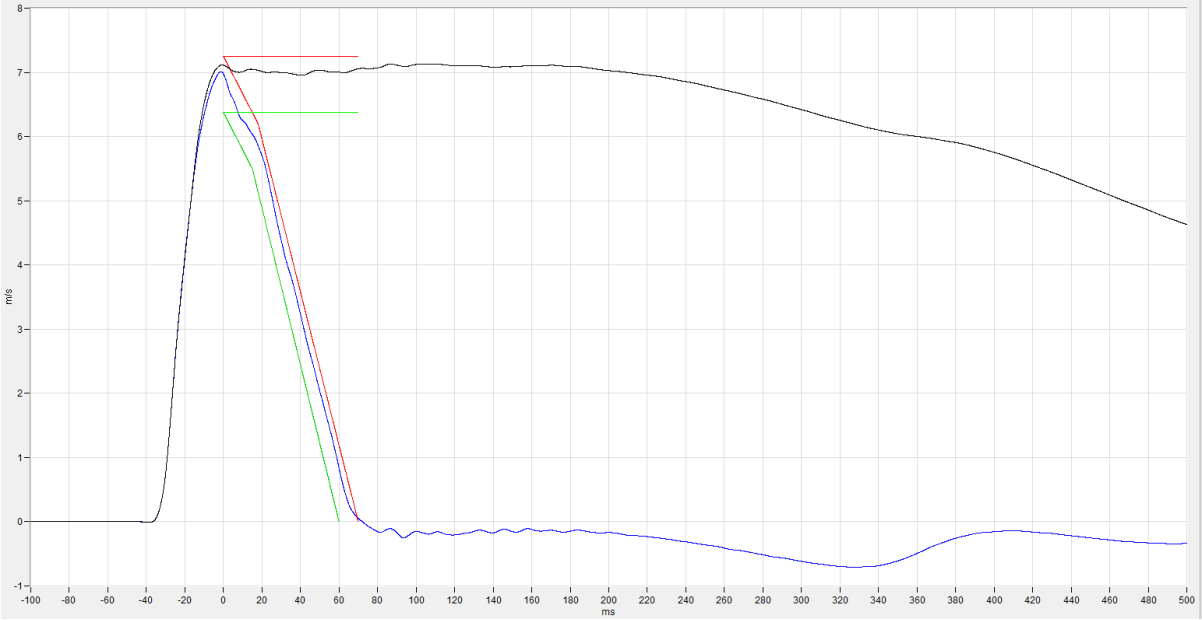

13 WE-13

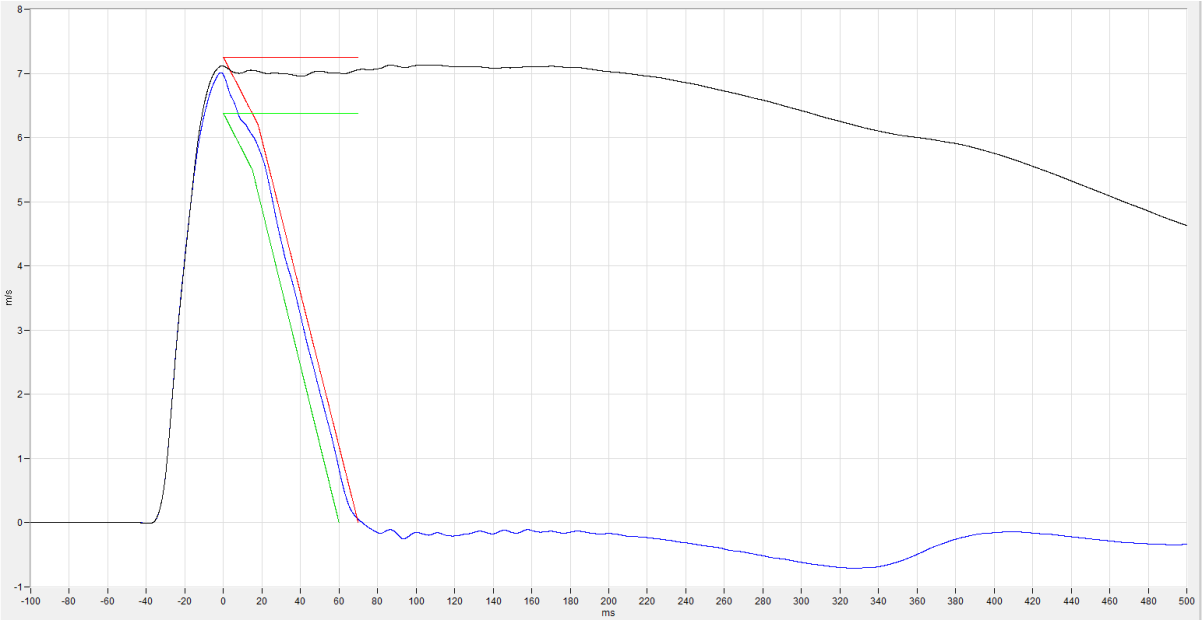

14 WE-14

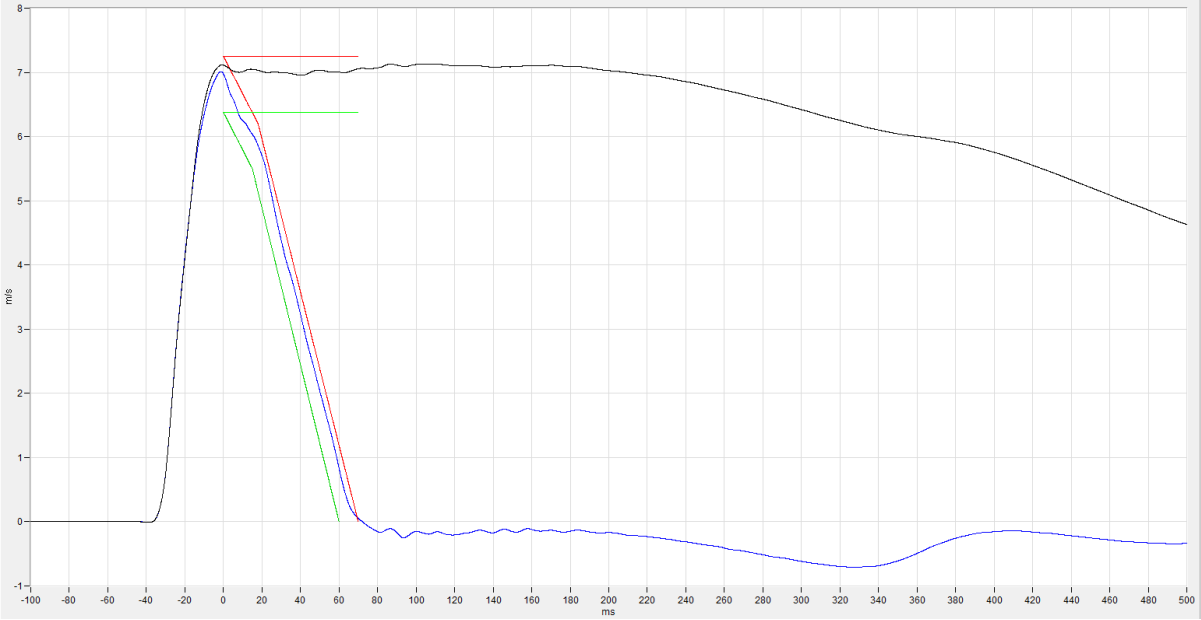

15 WE-15

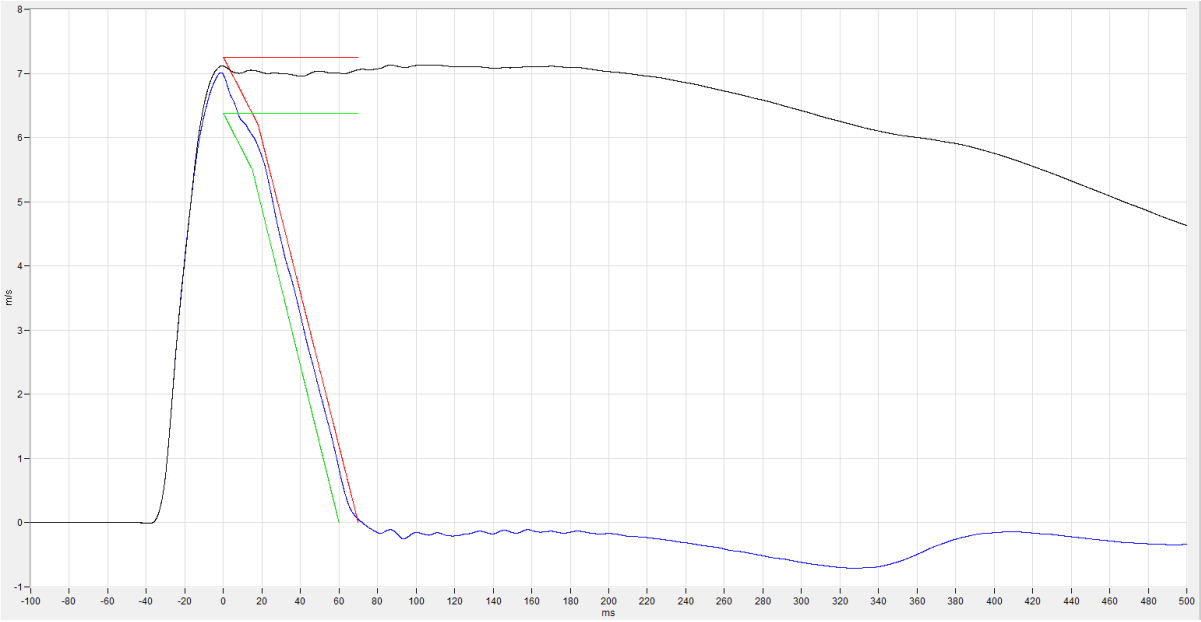

16 WE-16

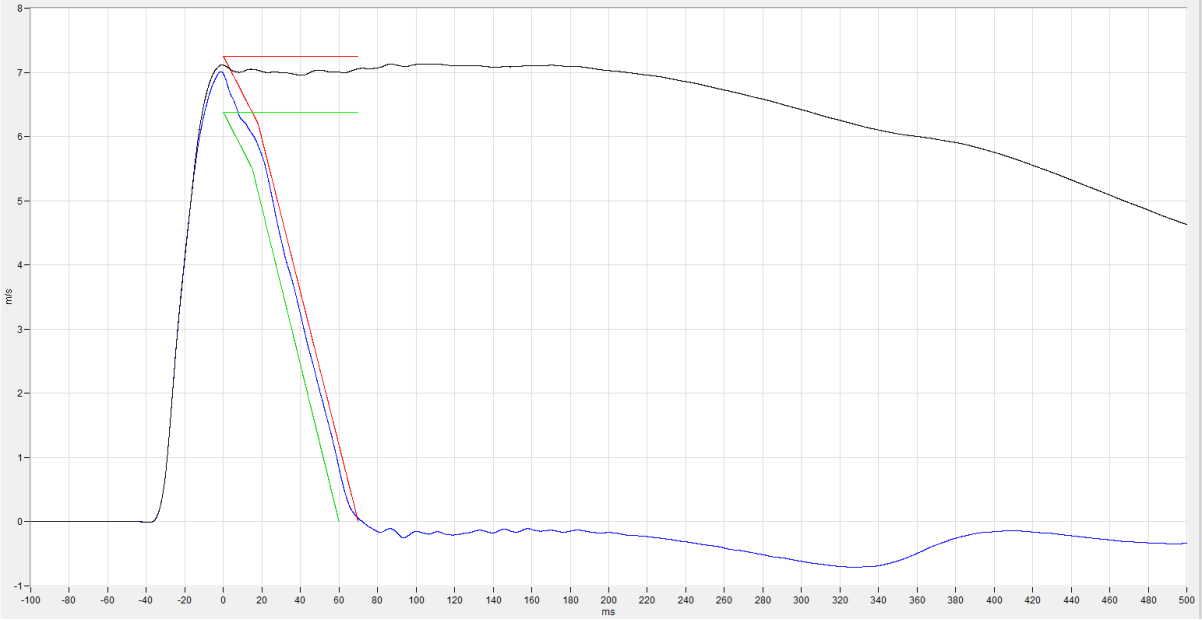

17 WE-17

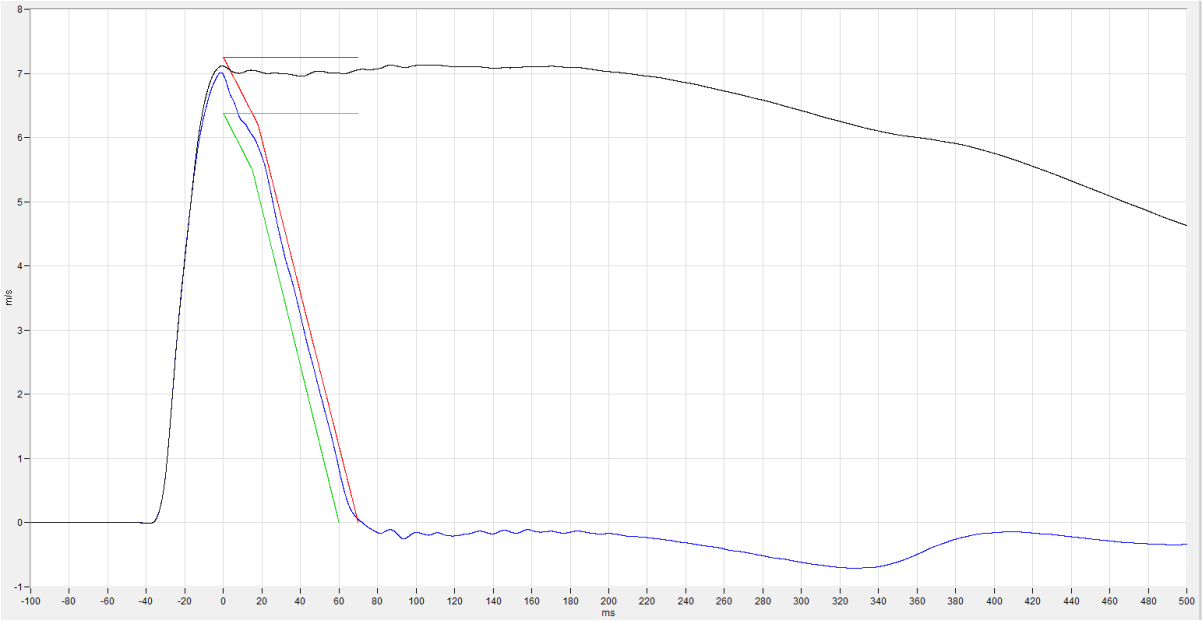

18 WE-18

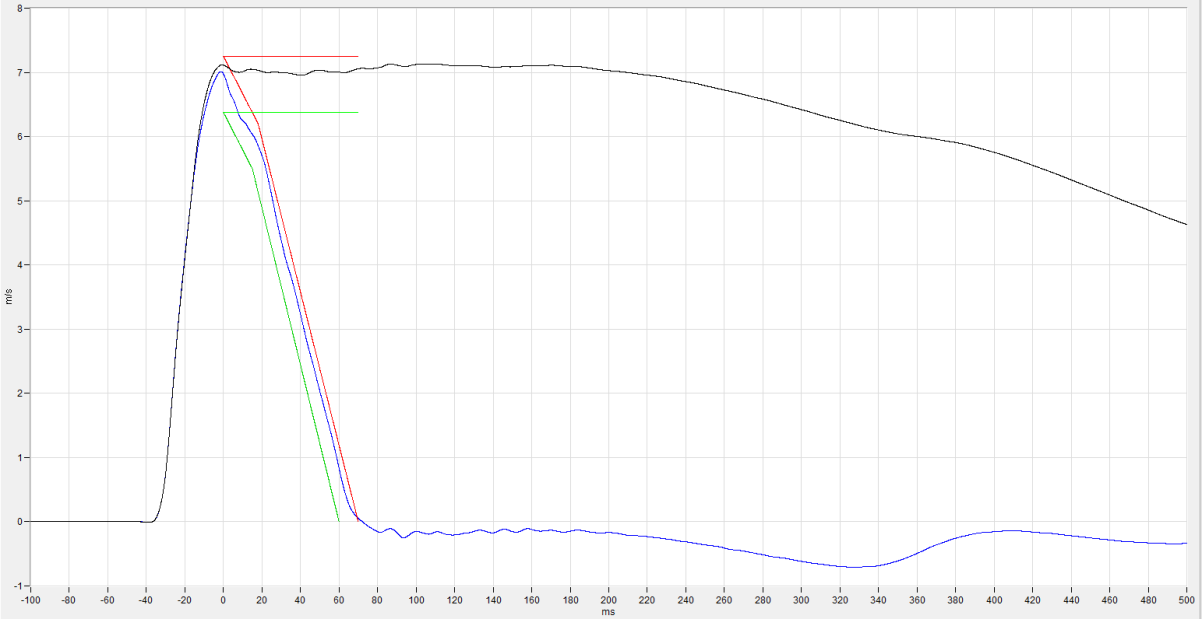

19 WE-19

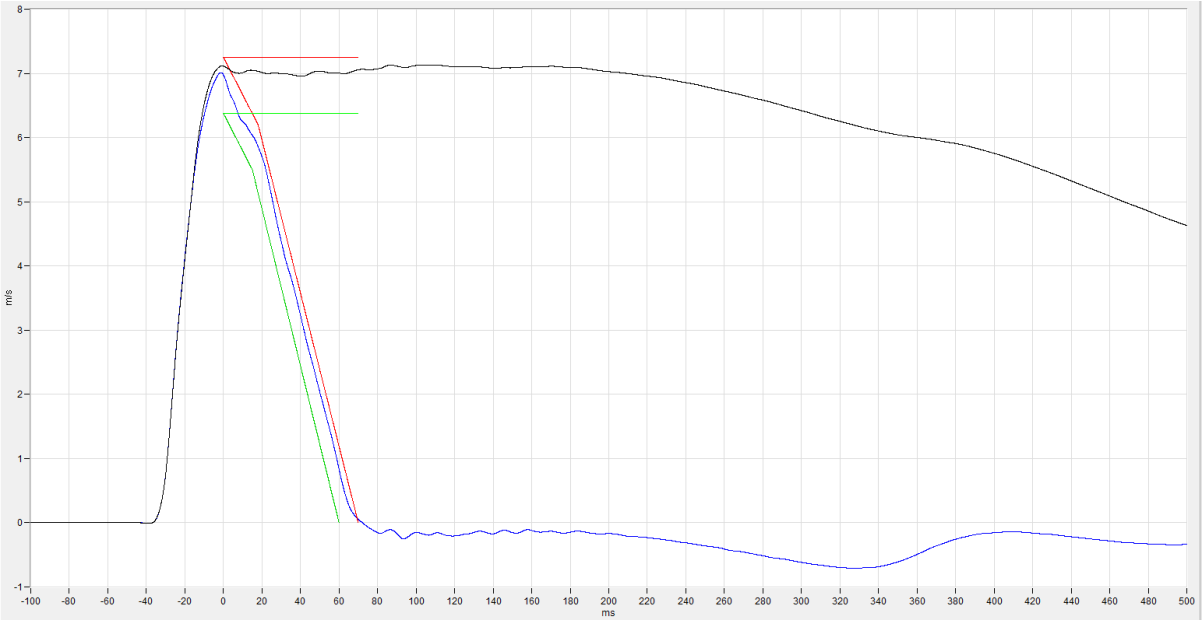

20 WE-20

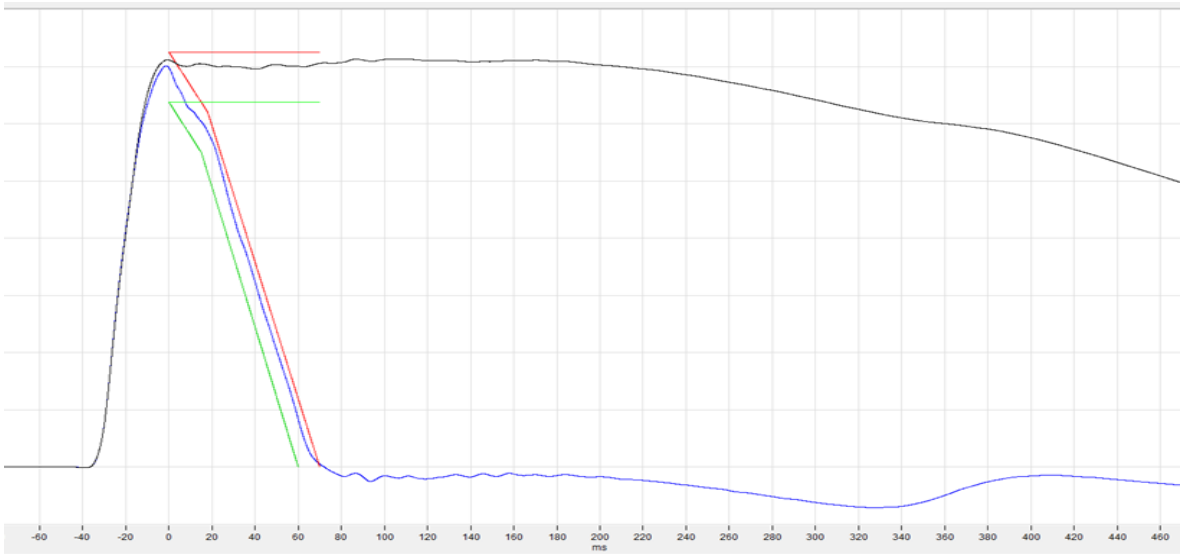

21 WE-21

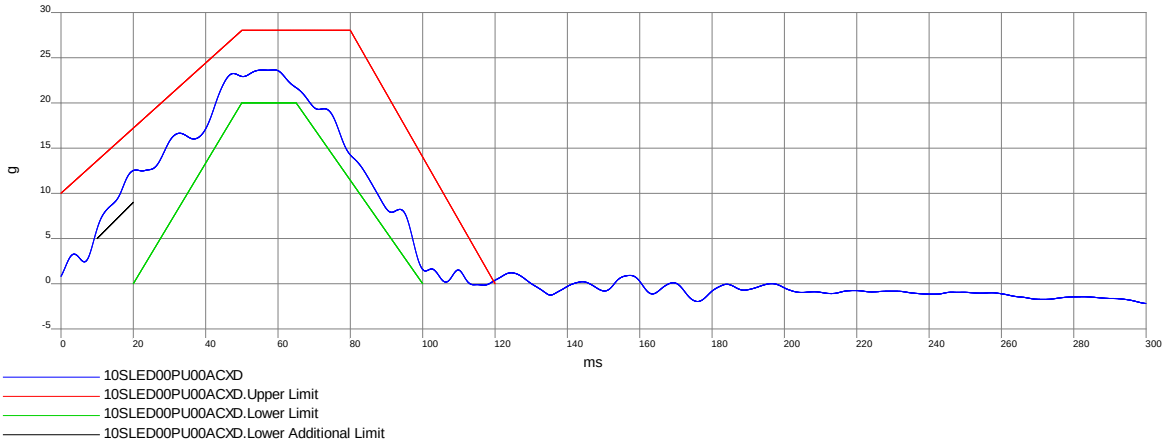

22 WE-22

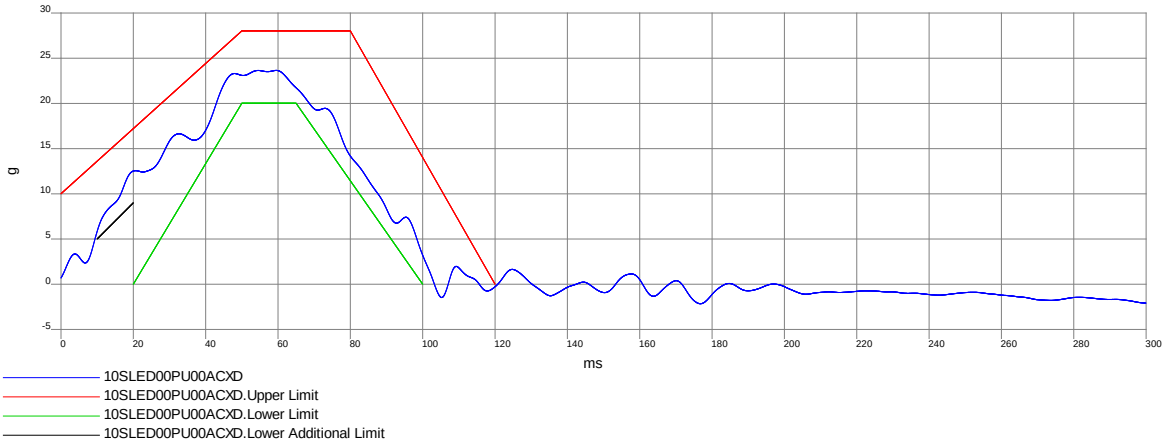

23 WE-23

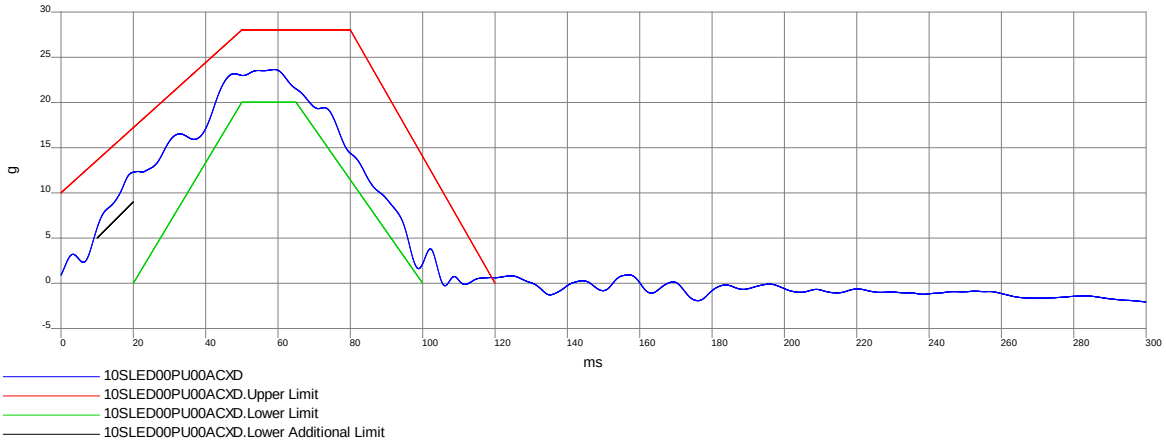

24 WE-24

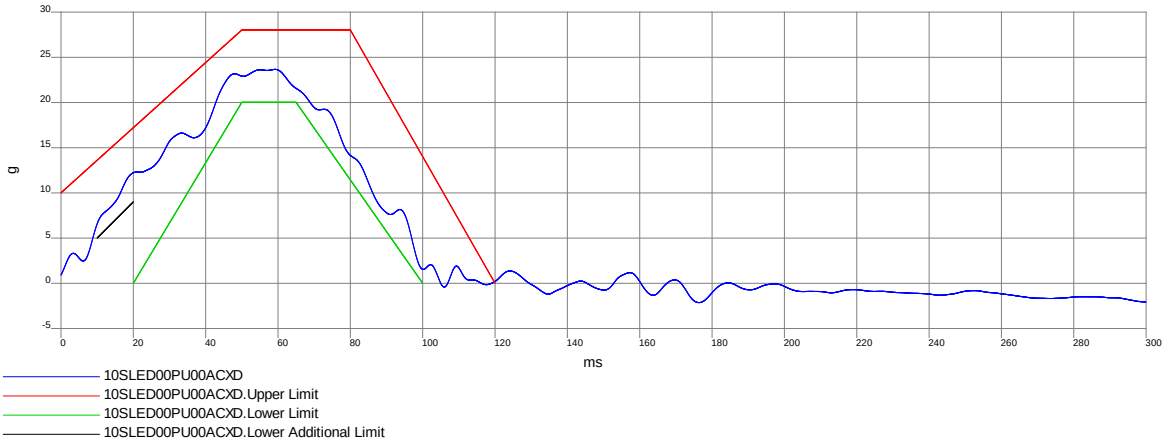

25 WE-25

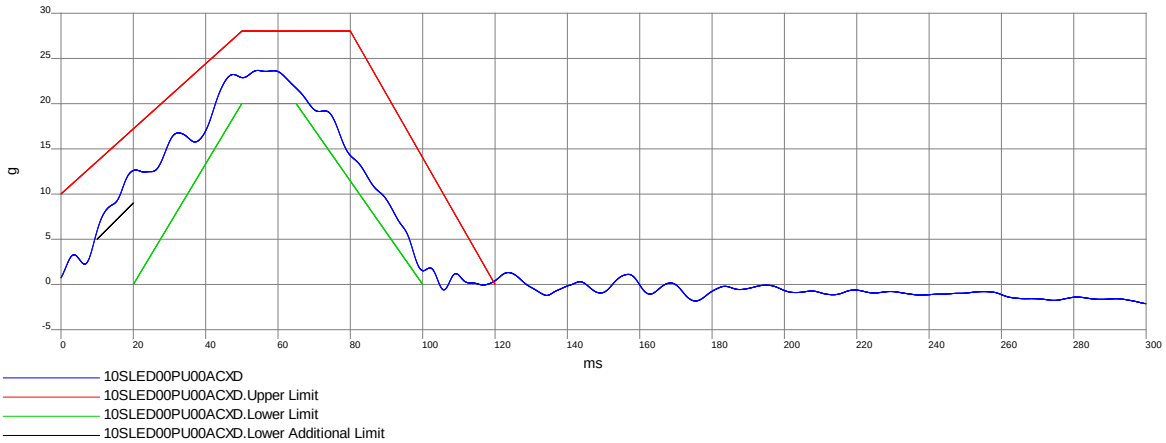

UNIFORM PROVISIONS CONCERNING THE APPROVAL OF ENHANCED CHILD RESTRAINT SYSTEMS USED ON BOARD OF MOTOR VEHICLES

(UN Regulation No. 129.03)

FOR PRODUCT TYPE WG07 FIX

☒ **Application for type approval**

☐ **Application for extension of type approval**
Number of approval: ---

Responsible person:

General Manager / Judy Chu
Ningbo Wegro Children Products Co., Ltd.

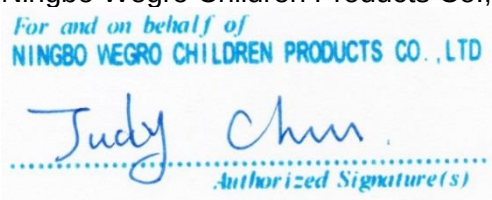

Confirmation

We declare hereby that the specimen ECRS submitted for this approval test has been manufactured and assembled on conditions of ordinary mass production and that they are compatible with enclosed documentation.

Responsible person:

General Manager / Judy Chu
Ningbo Wegro Children Products Co., Ltd.

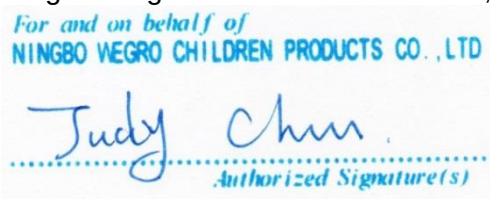

0 GENERAL

0.1 Trade name or mark:

HEMERA, HEMERA FIX, HEMERA FIX BASIC, HEMERA FIX SP BASIC, HEMERA FIX SP PRO, WEGRO, Angelbaby, B&B WORLD, Nurse, Be Cool, Jane, Foppapedretti, KinderKraft, Fedora, SMYK, MALLER, JUNIORS, BABY&PLUS, KRAFT, Easybaby, Pierr Cardin Paris, X-ADVENTURE, Baby Design, Babyton, MS, Happy Baby, Phil&teds, Cosatto, Galzerano, Camera, KISS BABY, WEI-B, KANZ, BABY CODE, PIERR CARDIN, BABY2GO, NICE BABY, SAFEWAY, INFABABY, Cotobaby, Babyhome, Silver Cross, ADAMEX, Bebesit, Axkid, Babycare, Halfords, Prinsel, Kooltrade, CuddleCo, BabySafe, Babyauto, Bebesafe, Infanti, Cosco, Maxicosi, Kiddy, Bambino, Romer, Chipolino, Babystart, Skep, Kikkaboo, Bebe Stars, Kiddo, RETRUS, coletto, asalvo, ctrl, BABYCO, Leatherette, Prams, Angelo, EASYGO, COLIBRO, Nania, AXONKIDS, DOREL, bbqool, bene baby, king baby, mega baby, HALFORD, Hugo Baby, KOOPERS, BEBLUM, OODS, AVORA, Perodua, Cam, EURO CART CAVOE, More, Formula baby, Migo, William Kent, skiddoü, Titaniumbaby, Kidsriver, Auto Comfort, Aldo, AEGIS, MAGIC, BeBaby, KidGo, KidMobil, Kidwell, Babify, TIMGRO, Martin noir, 2ME, EKOBEBE, Babysing, Wegrobaby, Elittle, ELITTILE, motherknows, Babyboat, 哈秀 Haxiu, playful, besbet, qborn, pouch, ESPIRO, 4BABY, Telforceone, MOMI, SPACEHOLDING, BORSINO, PLAY, Baby Direkt, ZOPA, COZY & SAFE, ESCOS, SEEC, Bebe2luxe, Renolux, Heyner, mybaby, My child, Babygo, Leclerc Baby, Silver Cross, My Junior, Kangaroo, Careone, Bebecar, Britton, SUNBABY, Hauck, Babyway, Infans, Ecotoys, Extreme Digital, 西松屋, Loopingfun, Star Ibaby, KIDSRIVER, CABINO, thansen, infababy, Smart baby, Casualplay, playxtrem, playmarket, DAIICHI, OLMITOS, niu, lionelo, Soonsung, quintonbaby, fairgo, kidgo, KISSBABY, EMBIX, CAMERA, BABYLO, glowystar, concord, Wah Ha, sweet heart paris, cxc, capsula, Petite & Mars, premaman, BonBijou, soluzo, PRINCE & PRINCESS, cocolatte, AKEEVA, Ledibaby(Sonic signal pro), GLOWY, BANANA, Beblum, Peppy, tuctuc, coccolle, ABC DESIGN, heyner, klippan, kidsriver, maxibaby, Royal home, Lunababy, Falcon Fresh, Millsons of London, Ryan, Bebecarucior, Leaman, Elele, Elelebaby, Miniuno, Phil&Teds, Casual, junglebaby, Inglesina, borsino, Iperbimbo, Pituso, Prados, Roys, ledibaby (Space Capsule 2 Pro), abner

0.2	Type or designation of ECRS:	WG07FIX
0.2.1.	Version(s):	WG07FIX BASIC, WG07FIX SP BASIC, WG07FIX SP PRO
0.2.2.	Commercial description(s):	n/a
0.5	Name and address of manufacturer:	Ningbo Wegro Children Products Co., Ltd. 2F Bldg. 3, No. 29, Lane 321, Tongning Road, Jiangbei District, 315033, Ningbo, Zhejiang Province, China (PRC)
0.7	In the case of components and separate technical units, location and method of affixing of ECE approval mark:	Sticker pasted on the back of product
0.8	Address(es) of assembly plant(s):	See 0.5

0.9.	Name and address of manufacturer's representative:	n/a
1	**DESCRIPTION OF THE DEVICE**	
1.3	Enhanced child restraint systems	
1.3.1	Category(ies):	☒ i-Size universal ISOFIX ☒ i-Size booster seat
1.3.2	Size range in centimeters:	76-150cm
1.3.3	Maximum occupant mass allowed for integral ECRS:	18kg
1.3.4	ECRS orientation:	76-105cm: forward-facing 100-150cm: forward-facing
1.3.5	Class of the retention system:	76-105cm: integral 100-150cm: non-integral
1.3.6	Belt type:	(adult) three-point belt ~~/(adult) lap belt /special type belt /retractor /n/a~~(1)
1.3.7	ISOFIX Vehicle Seat Fixture:	☒ISO/F2x ☐ISO/R2 ☒ISO/B2 ☐n/a
1.3.8	Anti-rotation device:	top-tether /~~support leg~~ /~~n/a~~(1)
1.3.9	Class of lock-off device:	☐A ☐B ☒n/a
1.3.10	Shoulder strap positioner:	☐applicable ☒not applicable
1.3.11	Load limiting device:	☐applicable ☒not applicable
1.3.12	Type of retractor:	~~automatically-locking~~ /~~emergency-locking~~ /n/a(1)
1.3.13	Other features:	chair assembly /~~impact shield~~(1)
1.3.14	Drawings, diagrams and plans of the ECRS, including any retractor, seat assembly, and impact shield fitted:	see corresponding drawings attached according BOM list
1.3.15	Declaration on toxicity of materials in accordance with par. 6.3.1.1 of ECE R129:	see Statement concerning the Toxicity and Flammability in page 7
1.3.16	Declaration on flammability of materials in accordance with par. 6.3.1.2 of ECE R129:	see Statement concerning the Toxicity and Flammability in page 7
1.3.17	User guide:	see Instruction manual and Installation label

1.3.18	Mass of the complete ECRS:	8.5 ± 0.5 kg
1.3.19	Brief description of installation in vehicle:	76-105cm: ISOFIX+top tether 100-150cm: adult 3-point belt+ISOFIX attachments or adult 3-point belt
1.3.20	Brief description of the retention of the child within the ECRS:	76-105cm:harness 100-150cm: adult 3-point belt
1.3.21	Backrest inclination adjustment of ECRS:	76-105cm: fixed 100-150cm: fixed
1.3.22	Module:	n/a
1.3.23	Other description:	n/a
1.3.24	Statement of variants:	see Statement of variants in page 8

(1) Strike out what does not apply.

2 PHOTOGRAPHS OF THE DEVICE

Front view

Side view

Back view

45° view

Statement Concerning the Toxicity and Flammability

We hereby declare that the materials used to manufacture the ECRS are in conformity with the requirements of paragraph 6.3.1.1 (EN71-3:2019) and paragraph 6.3.1.2 (EN71-2:2011+A1:2014 section 5.4) in UN regulation No. 129.03 regarding to the toxicity and flammability.

Responsible person:

General Manager / Judy Chu
Ningbo Wegro Children Products Co., Ltd.

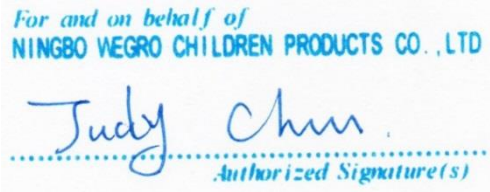

Statement of Versions

Variant / Model	Picture	Difference description
WG07FIX BASIC		Without side protection
WG07FIX SP BASIC		With Small side protection Drawing No.: WG07-2005-1/2 & WG07-2006-1/2
WG07FIX SP PRO		With Large side protection Drawing No.: WG07-2007

Annex list

Content		**Page No.**
BOM		1~4
Drawings	CRS assembly diagram	5
	CRS exploded view	6
	Parts	7~46
ISOFIX size envelope		47~49
Labels / markings on a product and their locations		50~56
Instruction manual		57~70
Packing information		71

BOM List

Product model:		WG07 FIX		G.W. (Kg) :	8±0.5kg	Version:		A1	Preparation date:	
No.	**Name**	**color/surface teatment**	**PIC**	**Spc(mm)**	**Drawing**	**Material**	**Unit**	**Usage**	**Weight(g)**	**Remarks**
(1) Blow Molding										
1	Headrest	Black			WG07-3001	HDPE	PC	1	640	
2	Chair body	Black			WG07-2001	HDPE	PC	1	3600	
(2) Plastic										
3	Head rest upper cover plate	Black	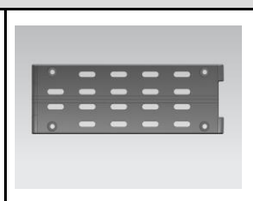		WG07-3002	PP K8003	PC	1	25	
4	Head rest lower cover plate	Black	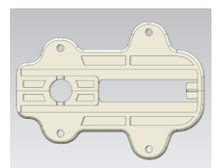		WG07-3003	PA66	PC	1	22	
5	Gear switch	Black	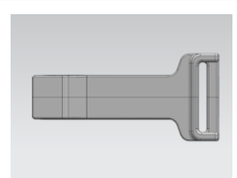		WG07-3004	PP K8003	PC	1	10	
6	Upper limit block	Black	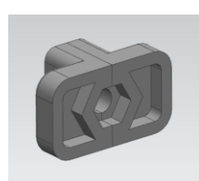		WG07-2002	PP K8003	PC	1	5	
7	Lower limit block	Black	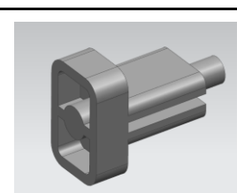		WG07-2003	PP K8003	PCS	2	9	
8	Pull ring	420C			WE04-4007	PP K8003	PC	1	5	
9	Guide hook left	Green			WG03-4003-1	PP K8003	PC	1	70	
10	Guide hook right	Green			WG03-4003-2	PP K8003	PC	1	70	
11	Regulator cover	420C			WG07-2004	PP K8003	PC	1	23	
12	Bottom	420C	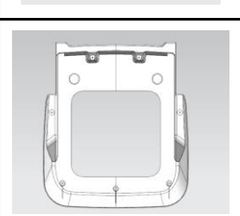		WG07-1001	PP K8003	PC	1	350	

BOM List

Product model:		WG07 FIX		G.W. (Kg) :	8±0.5kg	Version:		A1	Preparation date:	
No.	**Name**	**color/surface teatment**	**PIC**	**Spc(mm)**	**Drawing**	**Material**	**Unit**	**Usage**	**Weight(g)**	**Remarks**
13	Left side protective cover	Black	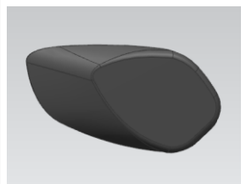		WG07-2005-1	PC/ABS	PC	1	18	
14	Right side protective cover	Black	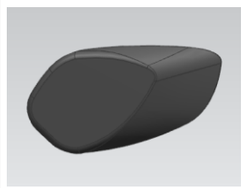		WG07-2005-2	PC/ABS	PC	1	18	
15	Left Side protection body	420C			WG07-2006-1	PP K8003	PC	1	22	
16	Right Side protection body	420C	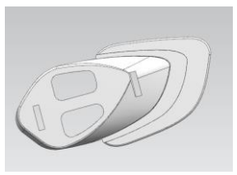		WG07-2006-2	PP K8003	PC	1	22	
17	Large side protection	Black	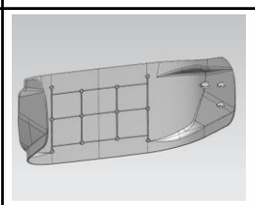		WG07-2007	PP K8003	PC	1	330	
(3) Stamping hardware										
18	Headrest gear pin	Galvanized		Φ10*17	WG07-3007	45# Steel	PC	1		
19	Buckle1	Black			WE05-10		PC	1		
20	Buckle2	Black			63-1362-xxb		PC	1		
21	Buckle3	Black			63-4959-xxb		PC	1		
22	top tether connector	Black			WG07-2009		PC	1		
23	top-tether regulator	Black			WG07-2010		PC	1		
24	Big Connecting plate	Galvanized			WE01-14-01		PCS	3		

BOM List

Product model:		WG07 FIX		G.W. (Kg) :	8±0.5kg	Version:		A1	Preparation date:	
No.	**Name**	**color/surface teatment**	**PIC**	**Spc(mm)**	**Drawing**	**Material**	**Unit**	**Usage**	**Weight(g)**	**Remarks**
25	Small Connecting plate	Galvanized			WG07-2011		PC	1		
26	Triple board	Galvanized			WG07-2012		PC	1		
27	Shoulder iron sheet	Galvanized			WG07-2014		PC	1		
28	Central regulator	Galvanized			WE01-15		PC	1		
29	ISOFIX Connector left	Galvanized	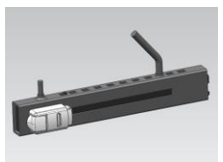		WG07-1002-1		PC	1		
30	ISOFIX Connector right	Galvanized	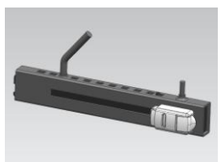		WG07-1002-2		PC	1		
31	Reinforced iron pipe	Galvanized			WG07-2013		PCS	2		
(4) Spring										
32	Regulator spring	Galvanized			WE04-4005	65MN	PC	1		
(5) Foaming										
33	Headrest EPE	White			WG07-3005	EPE	PCS	2		
34	Head sponge	Blue			WG07-3006	Slow rebound sponge	PCS	2		
35	Cushion EPE	White			WG07-2008	EPE	PC	1		
(6) Fasteners										
36	Self-tapping screws	Galvanized		ST4.2*16 GB845-85			PCS	18		
37	Self-tapping screws	Galvanized		ST4.2*25 GB845-85			PCS	12		

BOM List

Product model:		WG07 FIX		G.W. (Kg) :	8±0.5kg	Version:		A1	Preparation date:	
No.	**Name**	**color/surface teatment**	**PIC**	**Spc(mm)**	**Drawing**	**Material**	**Unit**	**Usage**	**Weight(g)**	**Remarks**
38	Nut	Galvanized		M6 GB889.1-2000			PCS	3		
39	Nut	Galvanized		M8 GB889.1-2000			PCS	2		
40	Washer	Galvanized		Φ12xΦ6x1.6			PCS	3		
41	Washer	Galvanized		Φ15xΦ5x1			PCS	2		
42	Blind Rivet	Galvanized		Φ5x13			PC	1		
43	Hexagon headed bolt	Galvanized		M6*45GB5782-2000			PC	1		
(7) Packing material										
44	Plastic Cable Tie			3*150			PC	1		
45	Instruction						PC	1		
46	PE bag			80*120cm			PC	1		
47	Carton			480*450*580mm			PC	1		
(8) label										
48	ECE Sticker						PC	1		
(9) Webbing										
49	shoulder strap	dark grey		38*1200mm			PCS	2		
50	crotch strap	dark grey		38*280mm			PC	1		
51	Adjusting belt	dark grey		25*950mm			PC	1		
52	top tether strap 1	dark grey		38*2380mm			PC	1		
53	top tether strap2	dark grey		38*300mm			PC	1		
54	Connecting belt	dark grey		25*500mm			PC	1		
(10) Cloth cover										
55	Cloth cover						PC	1		

Organization: Auditor: Approval:

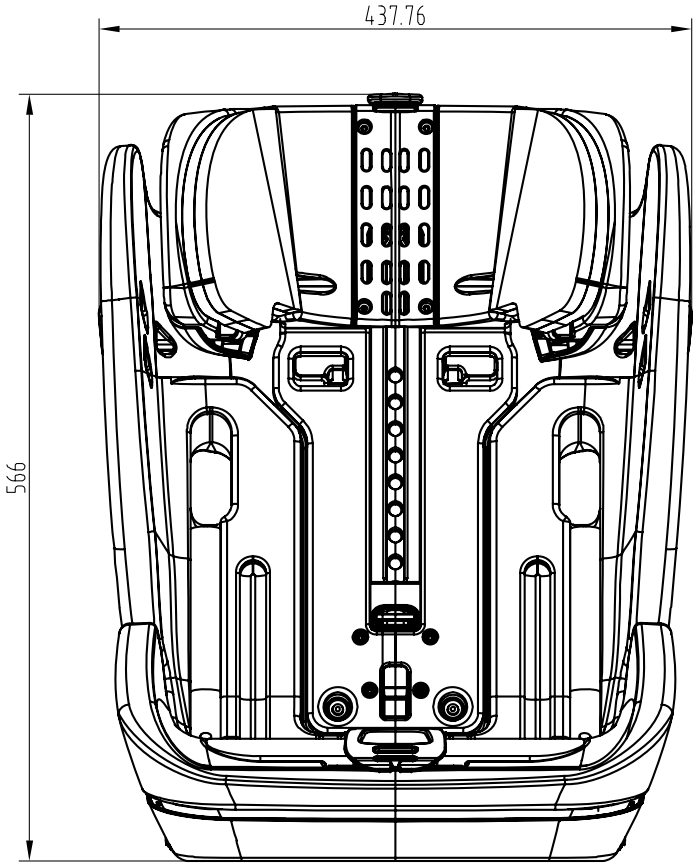

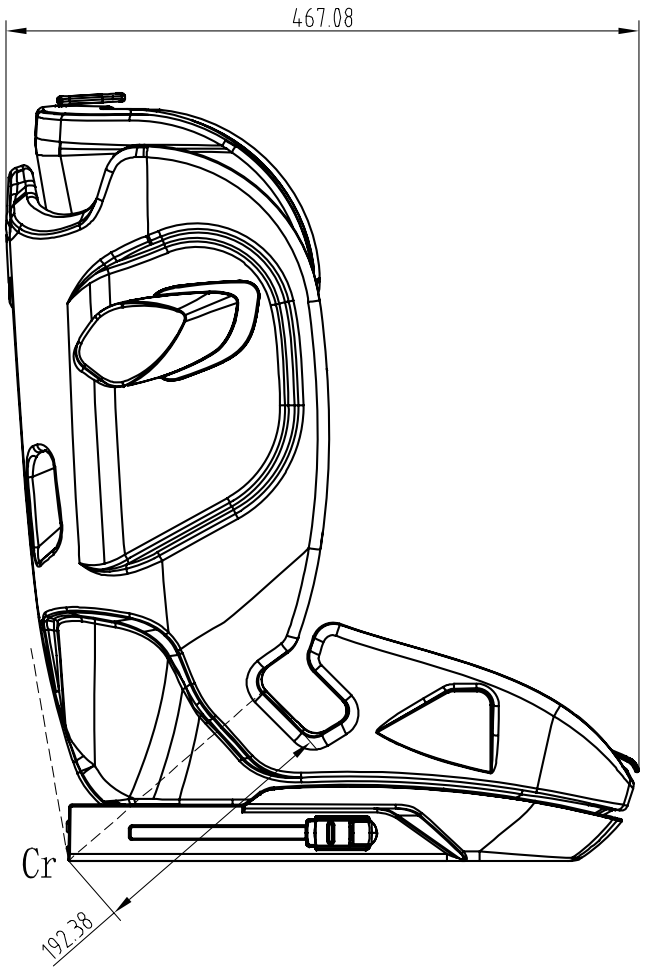

Mark	Q'TY	REVISION	SIGNATURE	DATE
DESIGN				
AUDIT				
TECH				
STANDARD				
APPROVED				

WG07 FIX			NINGBO WEGRO CHOLDREN PRODUCTS CO.,LTD
MARK	WEIGHT	SCARE	Assembly
A1			
TOTAL PAGE		PAGE	

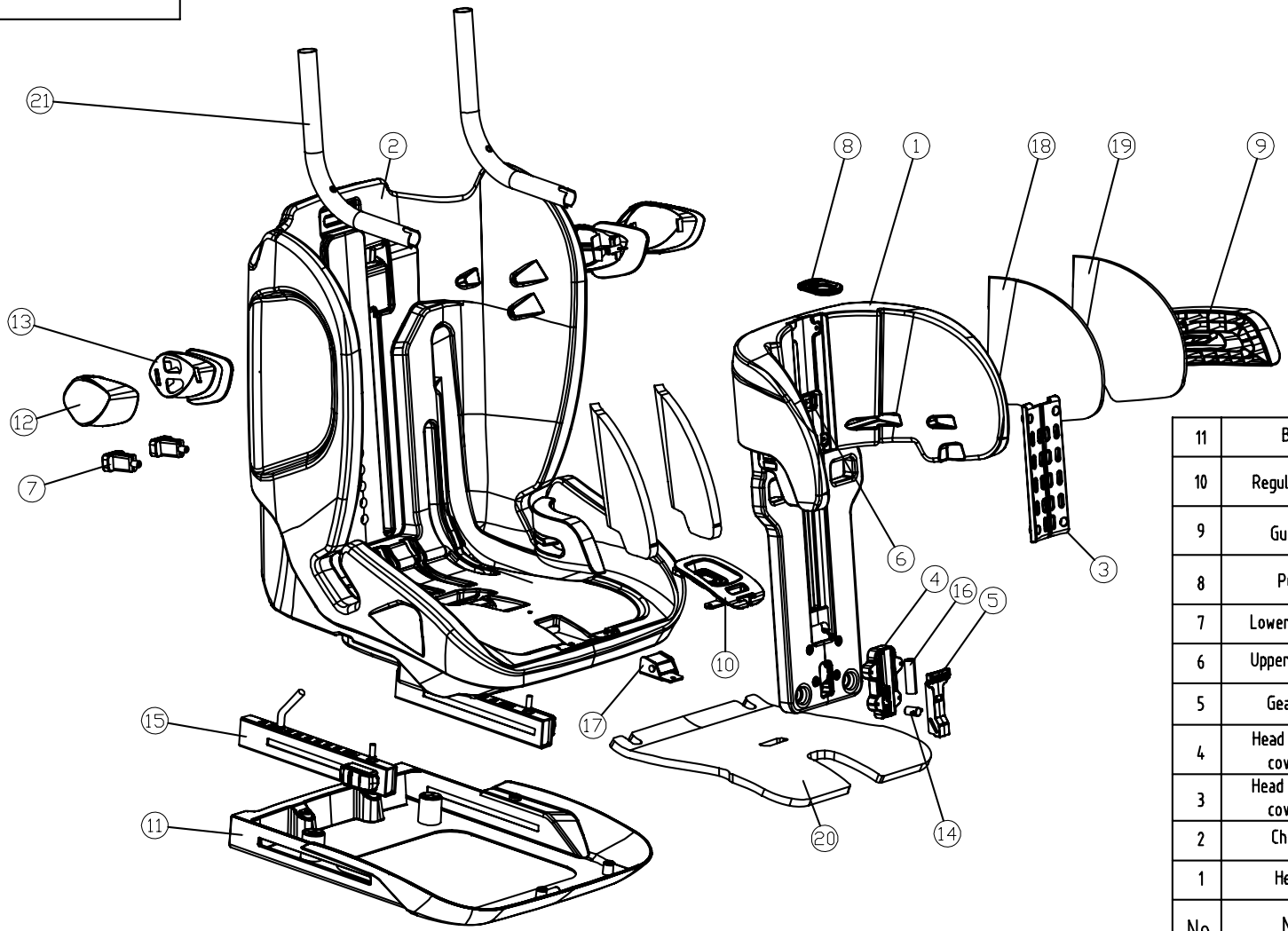

No.	Name	No.	Name
11	Bottom		
10	Regulator cover	21	Reinforced iron pipe
9	Guide hook	20	Cushion EPE
8	Pull ring	19	Head sponge
7	Lower limit block	18	Headrest EPE
6	Upper limit block	17	Central regulator
5	Gear switch	16	Regulator spring
4	Head rest lower cover plate	15	ISOFIX Connector
3	Head rest upper cover plate	14	Headrest gear pin
2	Chair body	13	Side protection body
1	Headrest	12	side protective cover

Mark	Q'TY	REVISION	SIGNATURE	DATE
DESIGN				
AUDIT				
TECH				
STANDARD				
APPROVED				

WG07 FIX

MARK	WEIGHT	SCARE
A1		

TOTAL PAGE PAGE

NINGBO WEGRO CHOLDREN PRODUCTS CO.,LTD

Exploded Views

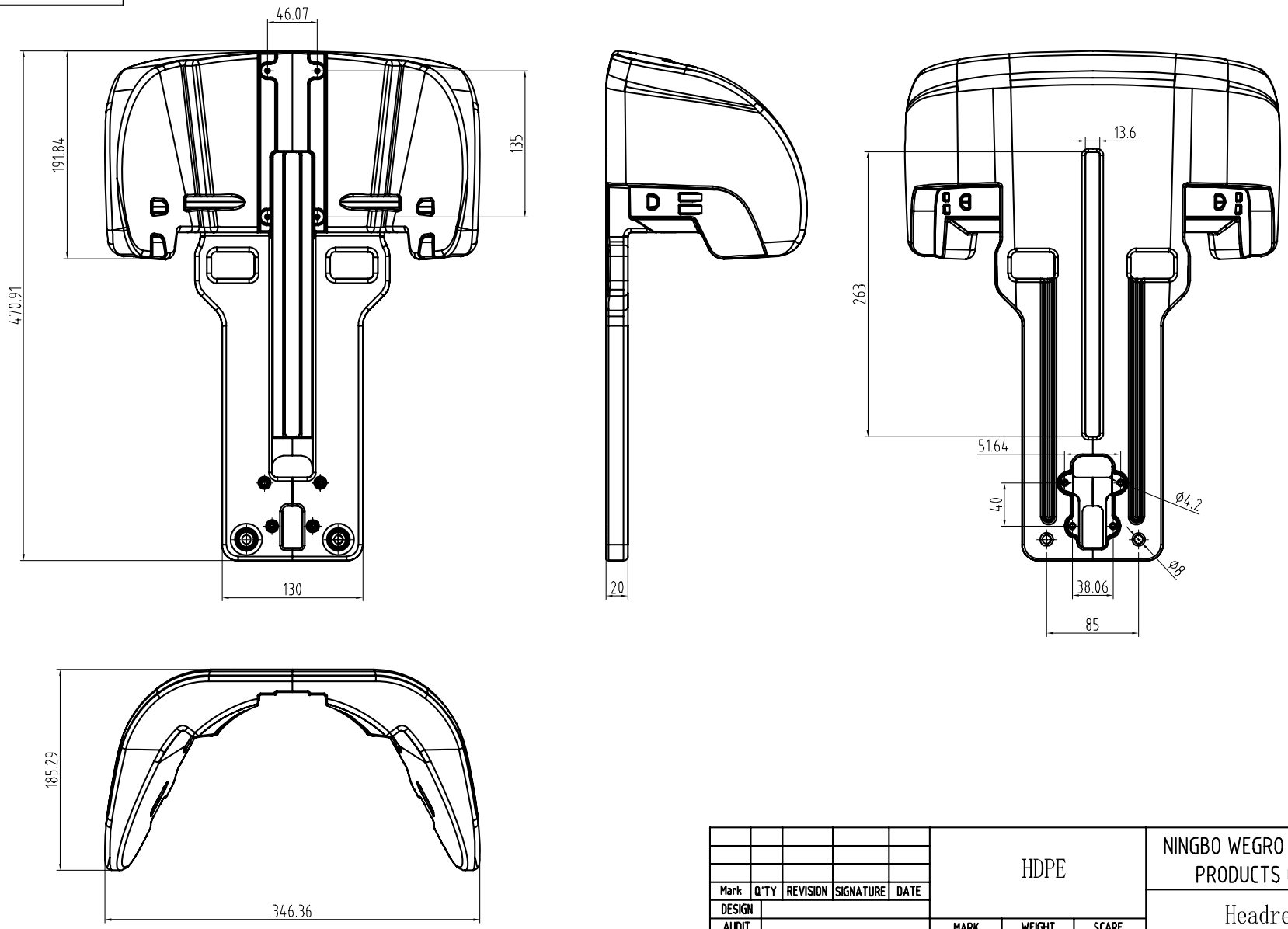

					HDPE		NINGBO WEGRO CHOLDREN PRODUCTS CO.,LTD
Mark	Q'TY	REVISION	SIGNATURE	DATE			
DESIGN							Headrest
AUDIT					MARK	WEIGHT	SCARE
TECH					A1		WG07-3001
STANDARD					TOTAL PAGE	PAGE	
APPROVED							

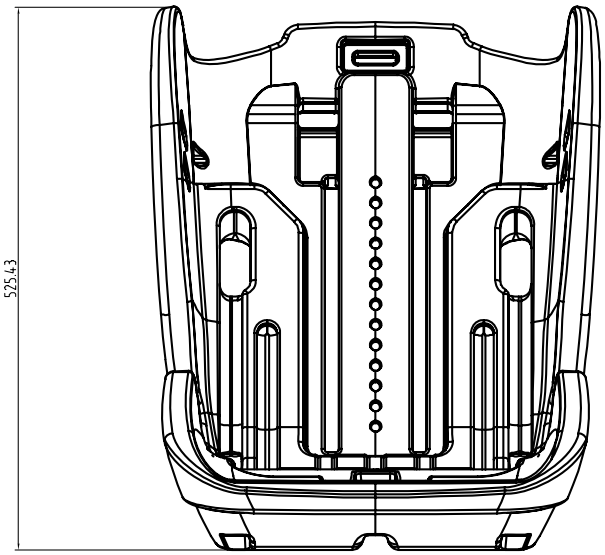

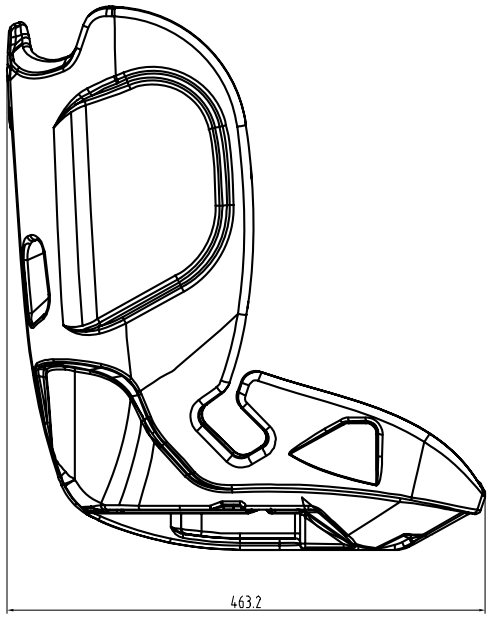

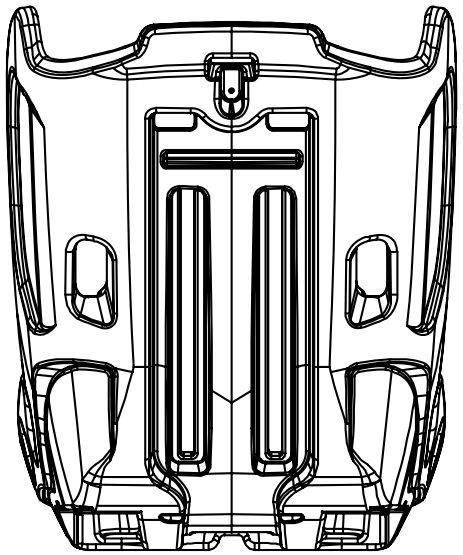

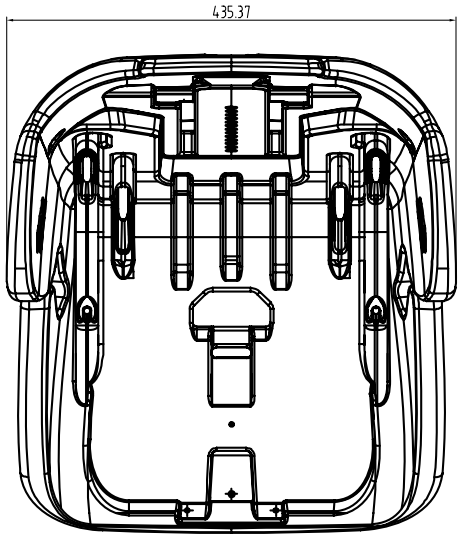

					HDPE			NINGBO WEGRO CHOLDREN PRODUCTS CO.,LTD
Mark	Q'TY	REVISION	SIGNATURE	DATE				
DESIGN								Chair body
AUDIT					MARK	WEIGHT	SCARE	
TECH					A1			WG07-2001
STANDARD					TOTAL PAGE		PAGE	
APPROVED								

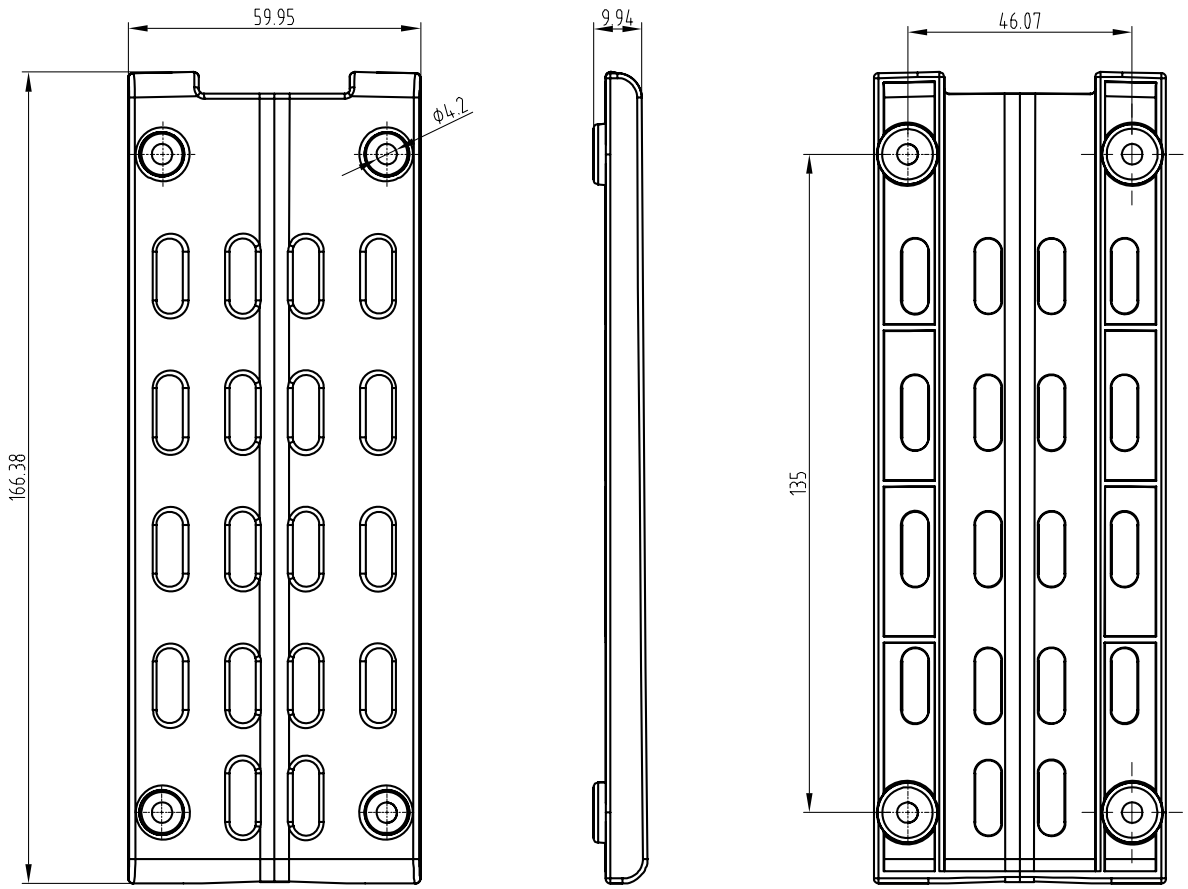

					PP K8003			NINGBO WEGRO CHOLDREN PRODUCTS CO.,LTD
Mark	Q'TY	REVISION	SIGNATURE	DATE				
DESIGN								Head rest upper cover plate
AUDIT					MARK	WEIGHT	SCARE	
TECH					A1			WG07-3002
STANDARD					TOTAL PAGE		PAGE	
APPROVED								

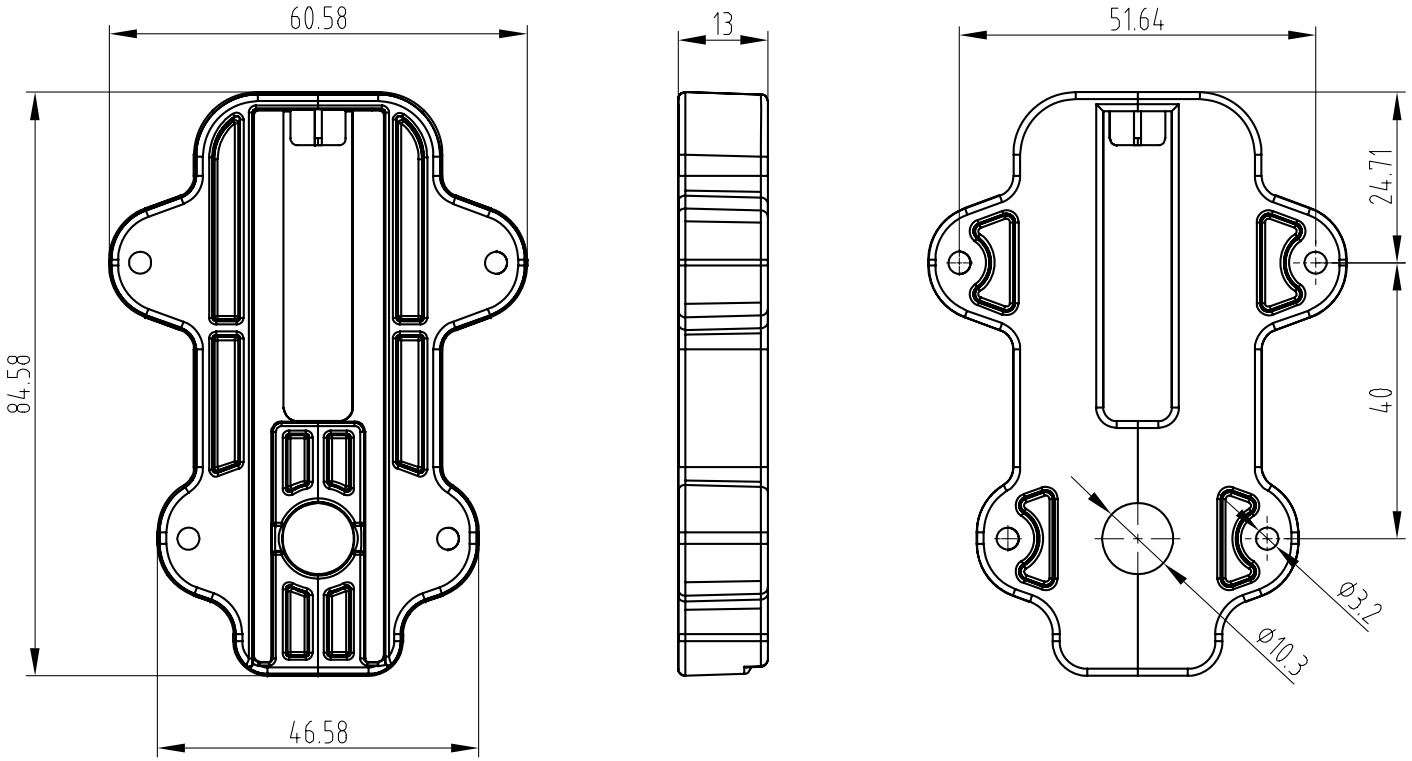

					PP K8003		NINGBO WEGRO CHOLDREN PRODUCTS CO.,LTD
Mark	Q'TY	REVISION	SIGNATURE	DATE			Head rest lower cover plate
DESIGN							
AUDIT					MARK	WEIGHT	SCARE
TECH					A1		WG07-3003
STANDARD					TOTAL PAGE	PAGE	
APPROVED							

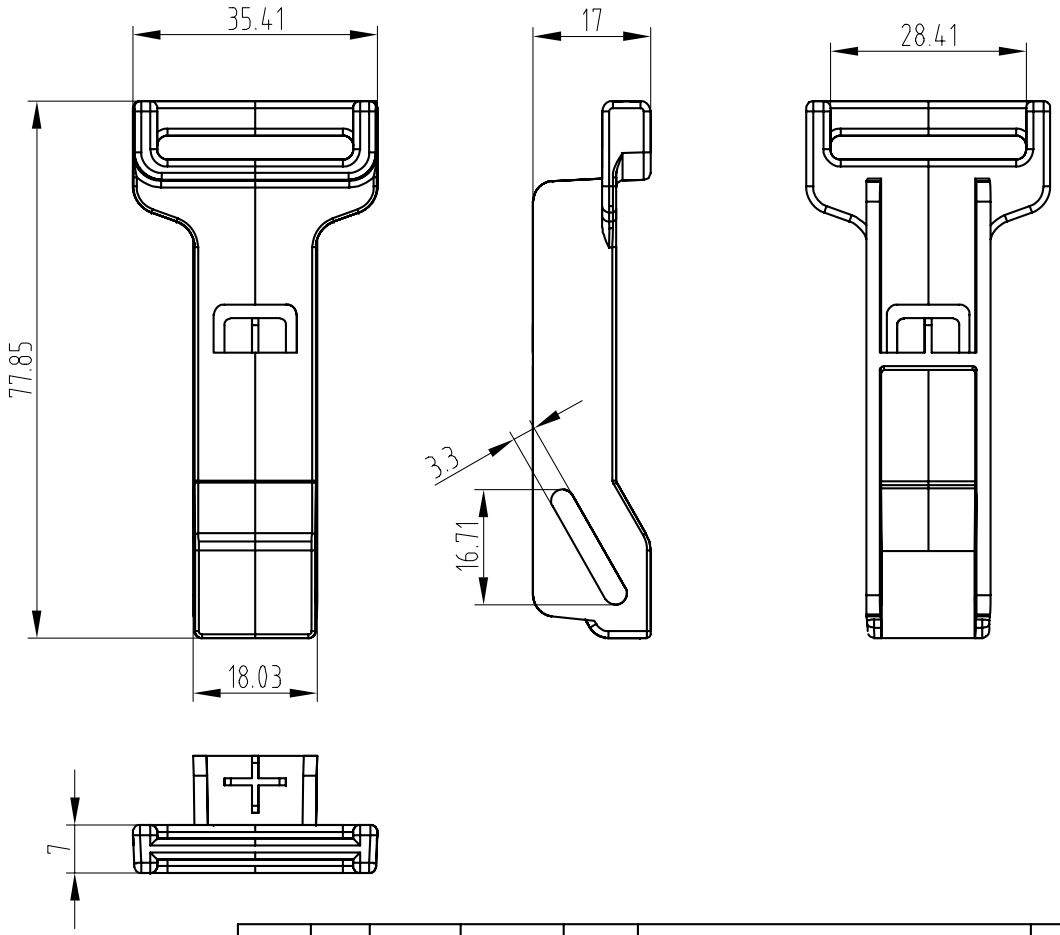

					PP K8003		NINGBO WEGRO CHOLDREN PRODUCTS CO.,LTD
Mark	Q'TY	REVISION	SIGNATURE	DATE			
DESIGN							Gear switch
AUDIT					MARK	WEIGHT	SCARE
TECH					A1		WG07-3004
STANDARD					TOTAL PAGE	PAGE	
APPROVED							

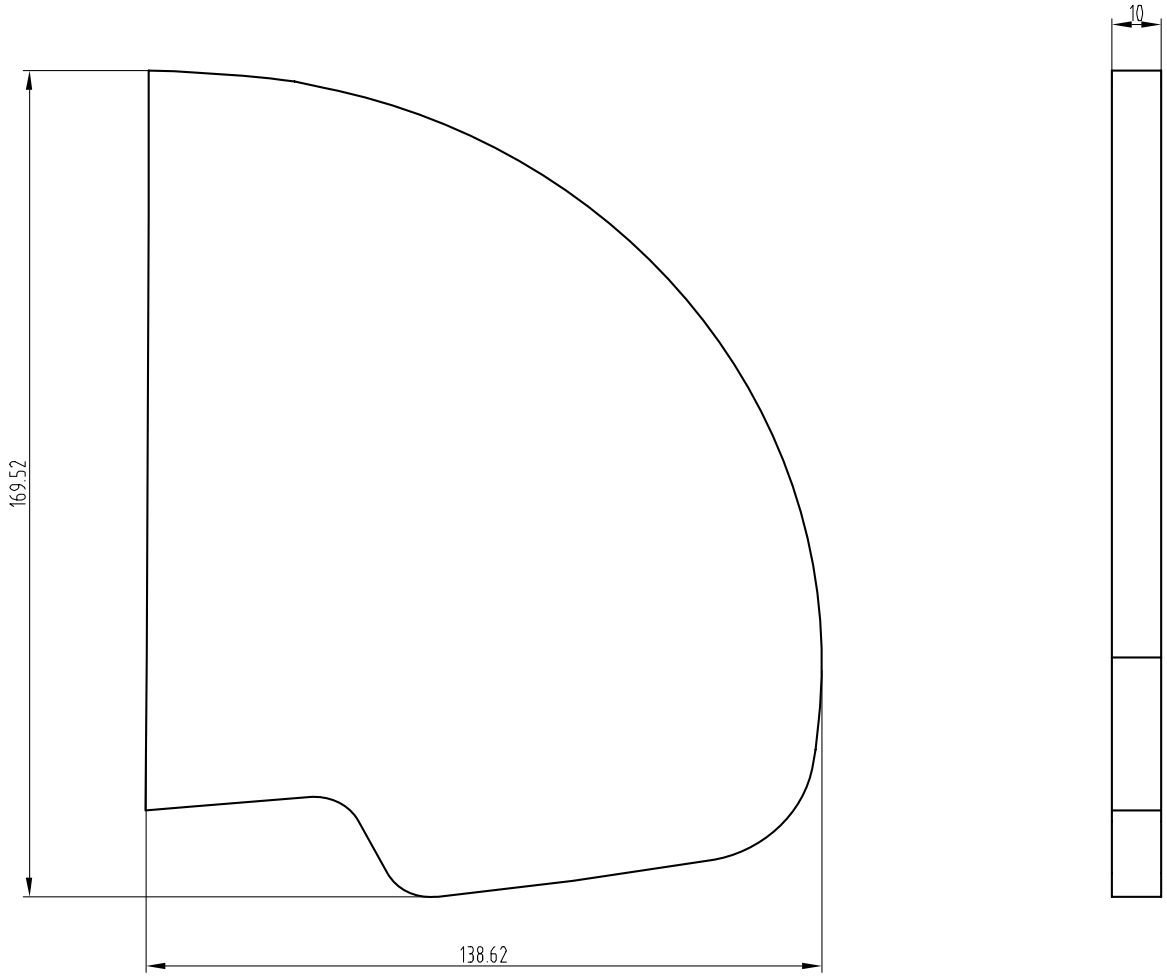

Mark	Q'TY	REVISION	SIGNATURE	DATE
DESIGN				
AUDIT				
TECH				
STANDARD				
APPROVED				

EPE

MARK	WEIGHT	SCARE
A1		

TOTAL PAGE PAGE

NINGBO WEGRO CHOLDREN PRODUCTS CO.,LTD

Headrest EPE

WG07-3005

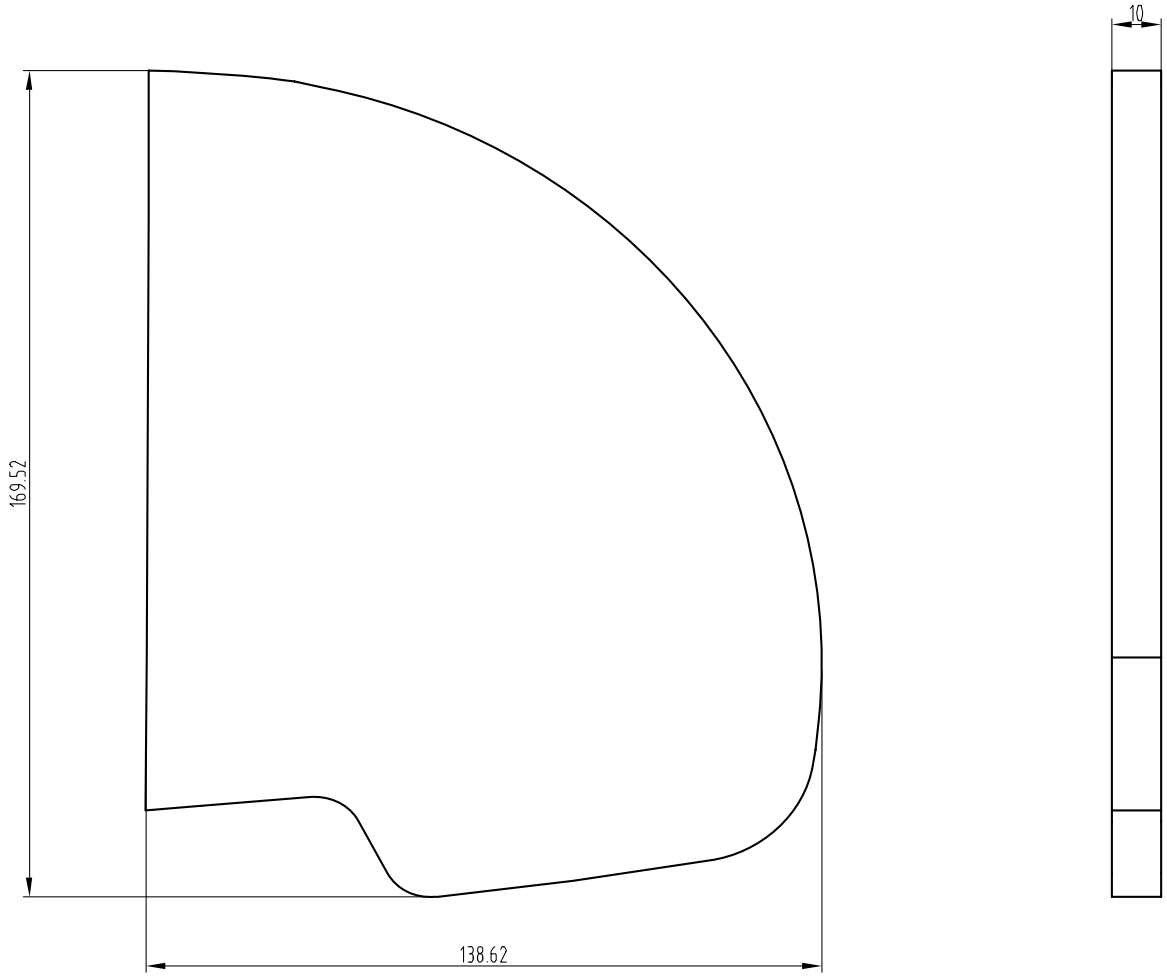

Mark	Q'TY	REVISION	SIGNATURE	DATE
DESIGN				
AUDIT				
TECH				
STANDARD				
APPROVED				

Slow rebound sponge			NINGBO WEGRO CHOLDREN PRODUCTS CO.,LTD
			Head sponge
MARK	WEIGHT	SCARE	
A1			WG07-3006
TOTAL PAGE		PAGE	

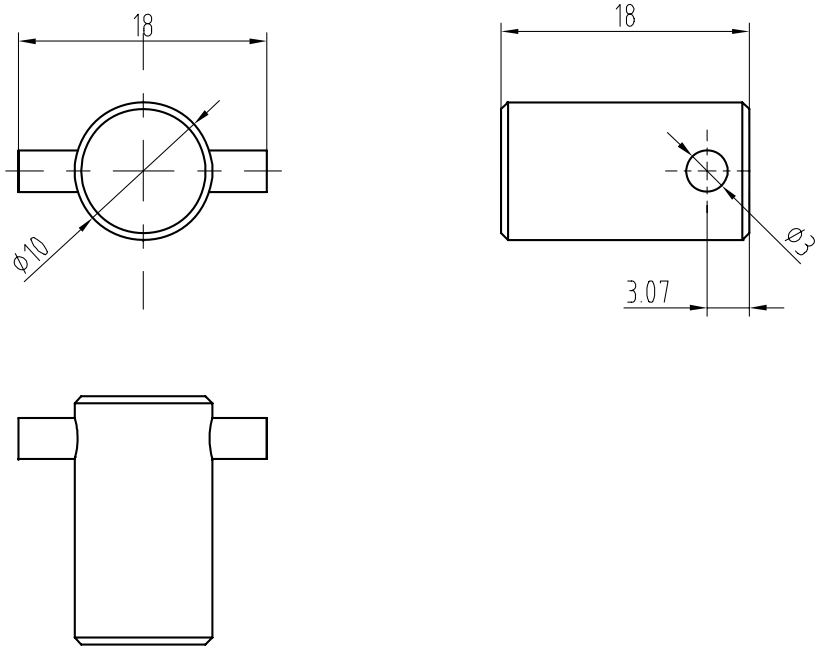

					45# Steel		NINGBO WEGRO CHOLDREN PRODUCTS CO.,LTD
Mark	Q'TY	REVISION	SIGNATURE	DATE			
DESIGN							Headrest gear pin
AUDIT					MARK	WEIGHT	SCARE
TECH					A1		WG07-3007
STANDARD					TOTAL PAGE	PAGE	
APPROVED							

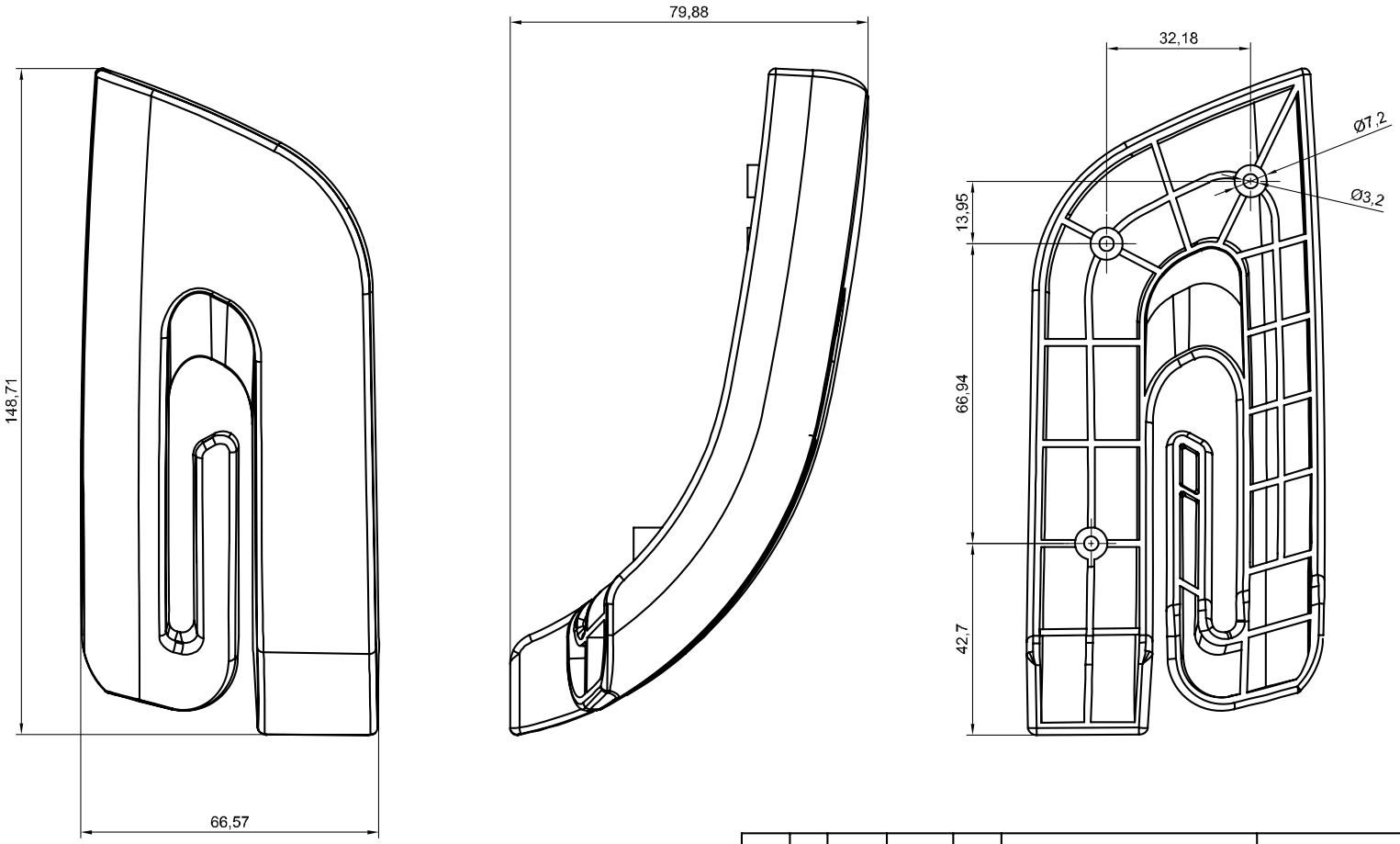

Mark	Q'TY	REVISION	SIGNATURE	DATE
DESIGN				
AUDIT				
TECH				
STANDARD				
APPROVED				

PP K8003		
MARK	WEIGHT	SCARE
A1		
TOTAL PAGE	PAGE	

NINGBO WEGRO CHOLDREN PRODUCTS CO.,LTD

Guide hook left

WG03-4003-1

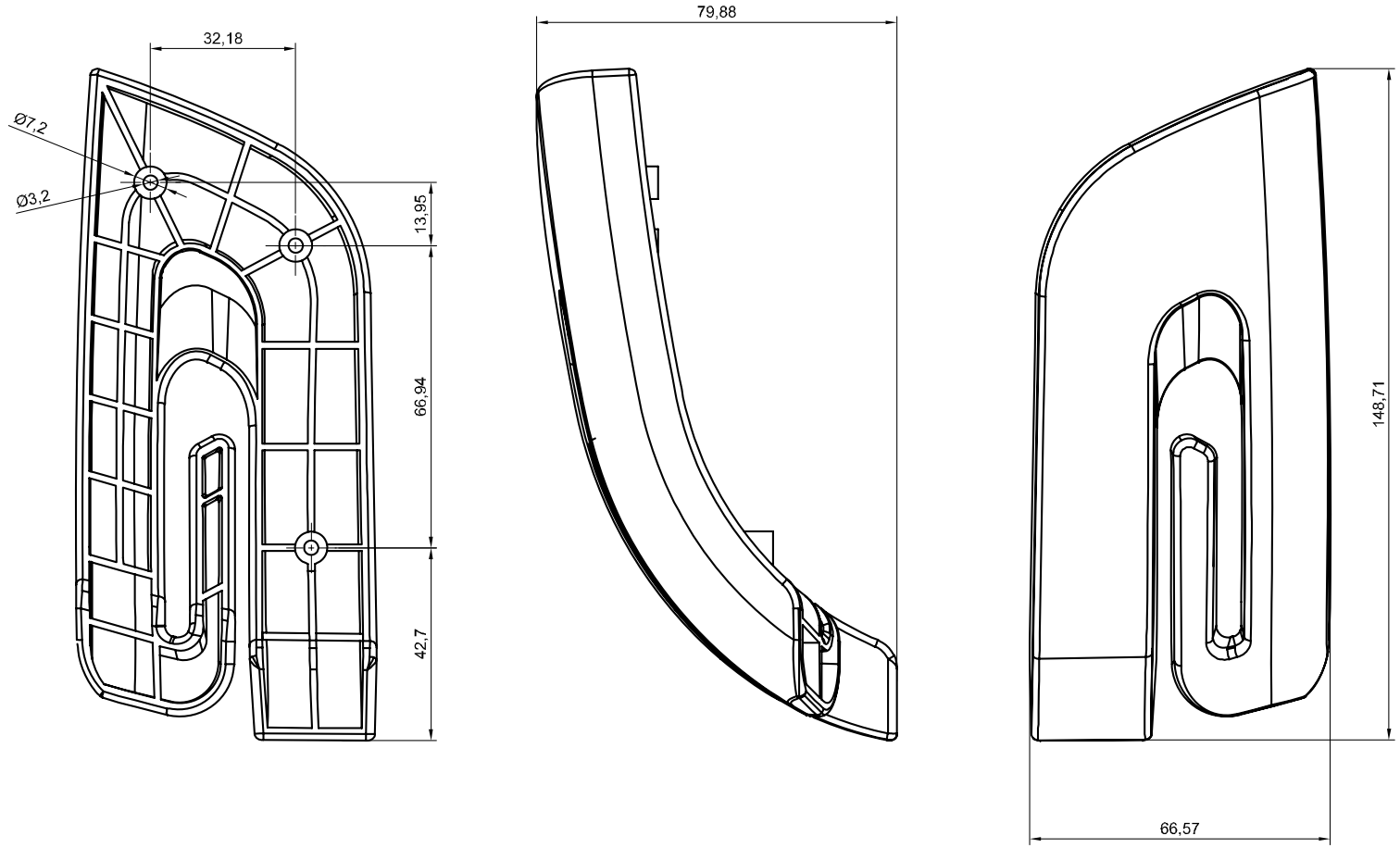

Mark	Q'TY	REVISION	SIGNATURE	DATE
DESIGN				
AUDIT				
TECH				
STANDARD				
APPROVED				

PP K8003			NINGBO WEGRO CHOLDREN PRODUCTS CO.,LTD
MARK	WEIGHT	SCARE	Guide hook right
A1			WG03-4003-2
TOTAL PAGE		PAGE	

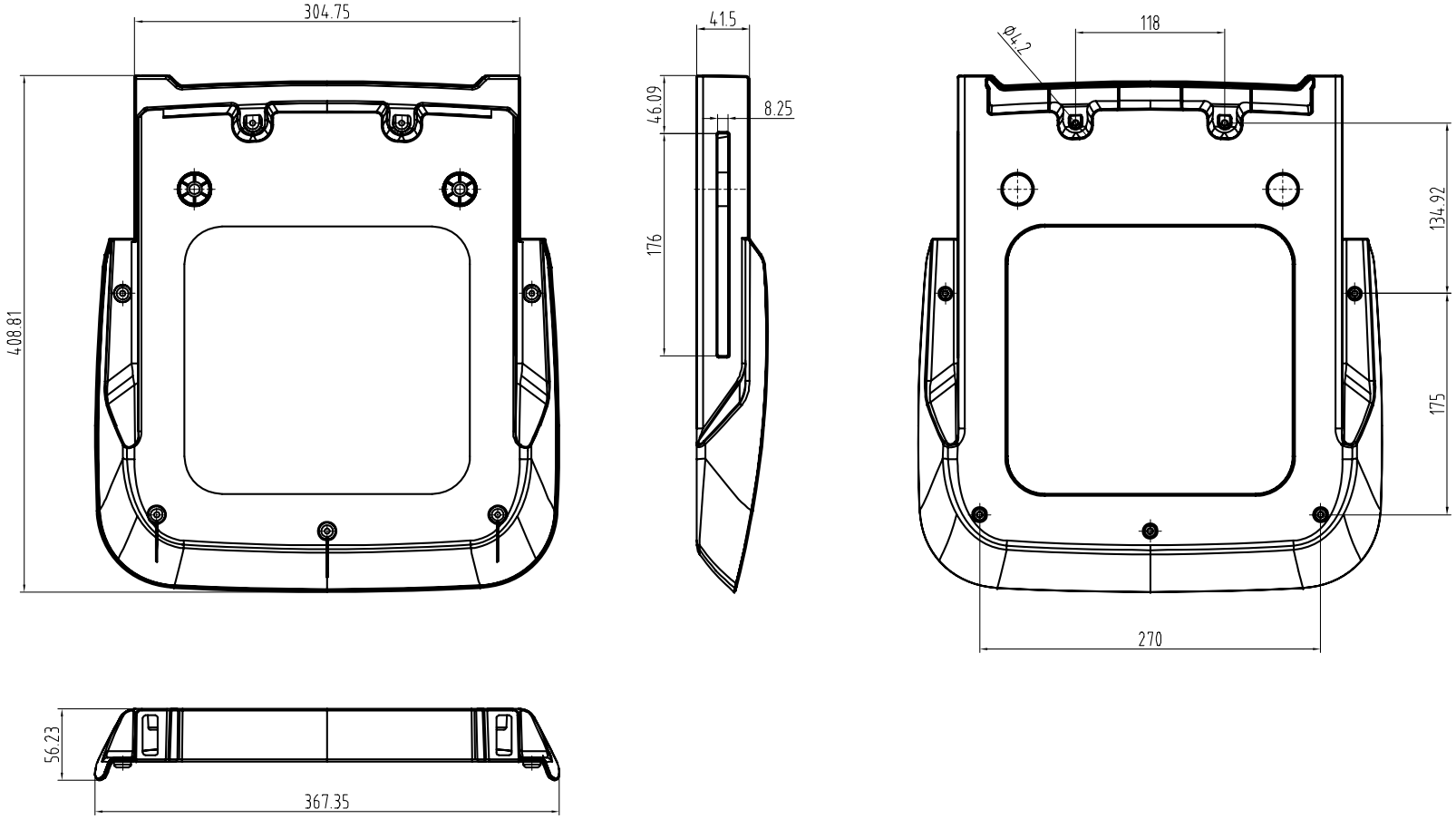

Mark	Q'TY	REVISION	SIGNATURE	DATE
DESIGN				
AUDIT				
TECH				
STANDARD				
APPROVED				

PP K8003

MARK	WEIGHT	SCARE
A1		

TOTAL PAGE PAGE

NINGBO WEGRO CHOLDREN PRODUCTS CO.,LTD

Bottom

WG07-1001

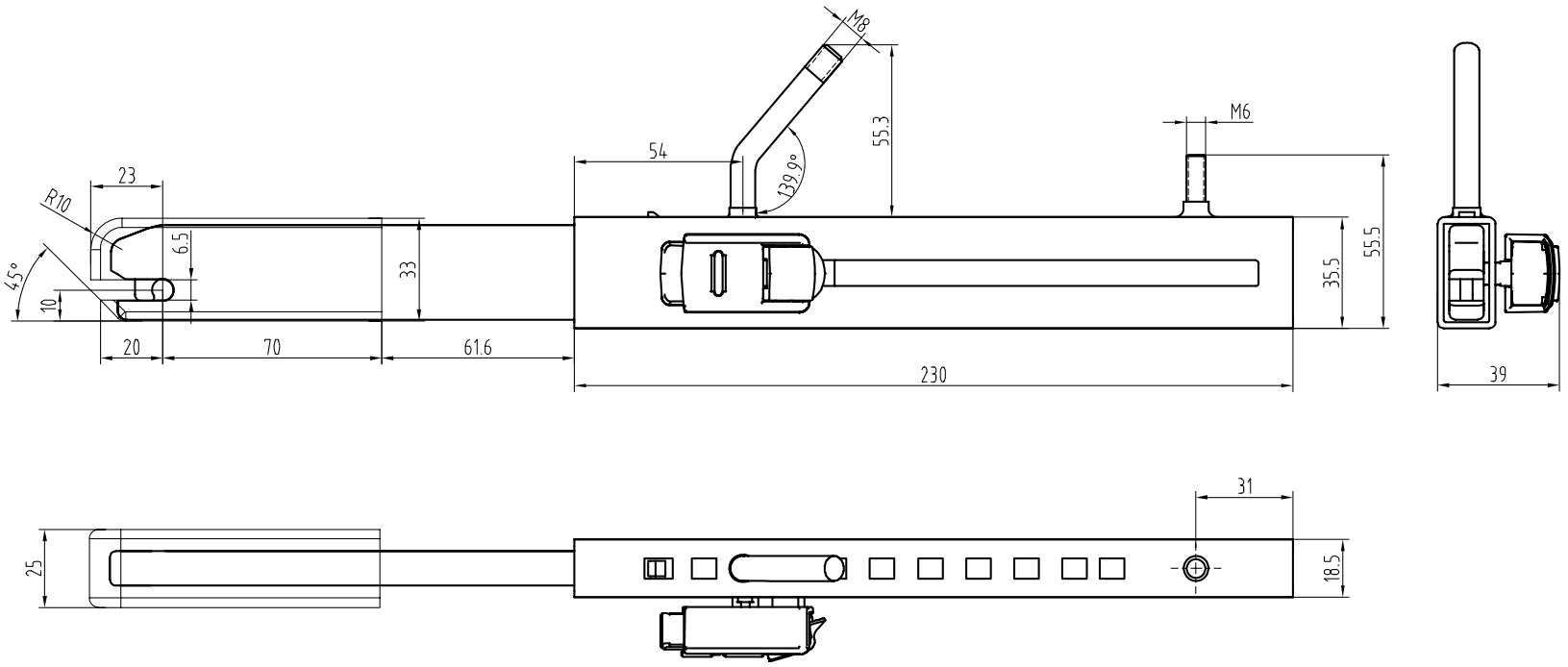

Mark	Q'TY	REVISION	SIGNATURE	DATE
DESIGN				
AUDIT				
TECH				
STANDARD				
APPROVED				

MARK	WEIGHT	SCARE
A1		
TOTAL PAGE		PAGE

NINGBO WEGRO CHOLDREN PRODUCTS CO.,LTD

ISOFIX Connector left

WG07-1002-1

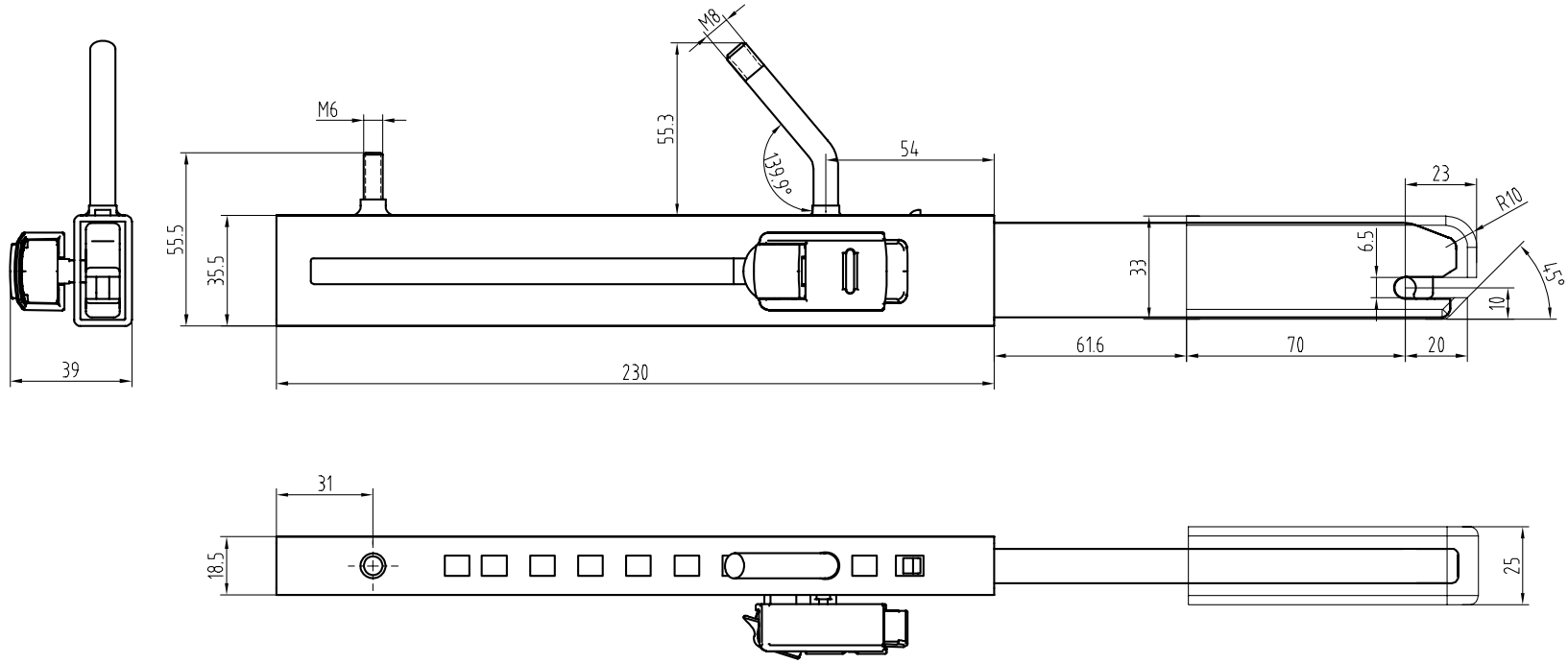

Mark	Q'TY	REVISION	SIGNATURE	DATE
DESIGN				
AUDIT				
TECH				
STANDARD				
APPROVED				

MARK	WEIGHT	SCARE
A1		
TOTAL PAGE		PAGE

NINGBO WEGRO CHOLDREN PRODUCTS CO.,LTD

ISOFIX Connector right

WG07-1002-2

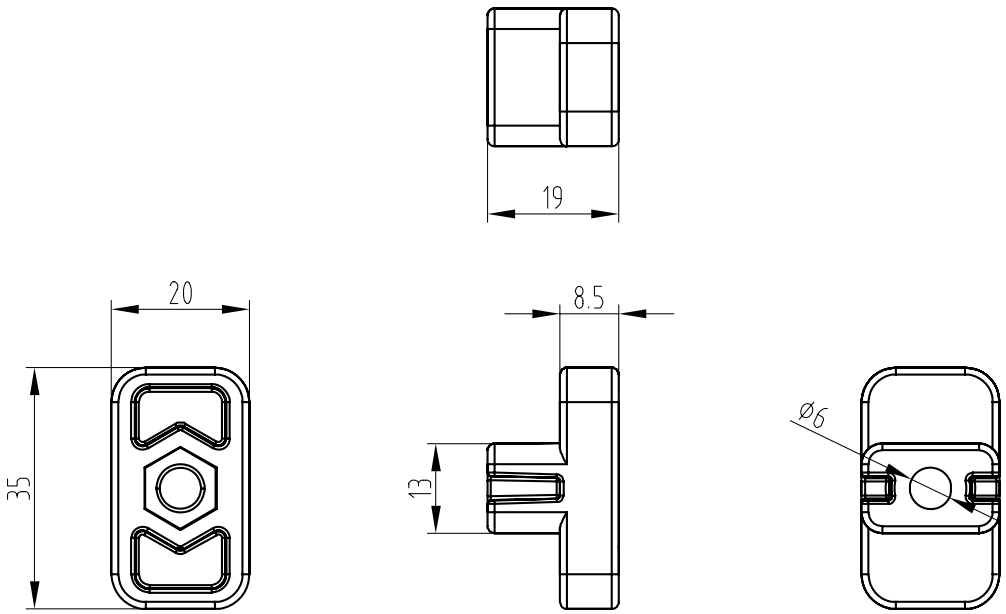

					PP K8003		NINGBO WEGRO CHOLDREN PRODUCTS CO.,LTD
Mark	Q'TY	REVISION	SIGNATURE	DATE			
DESIGN							Upper limit block
AUDIT					MARK	WEIGHT	SCARE
TECH					A1		WG07-2002
STANDARD					TOTAL PAGE	PAGE	
APPROVED							

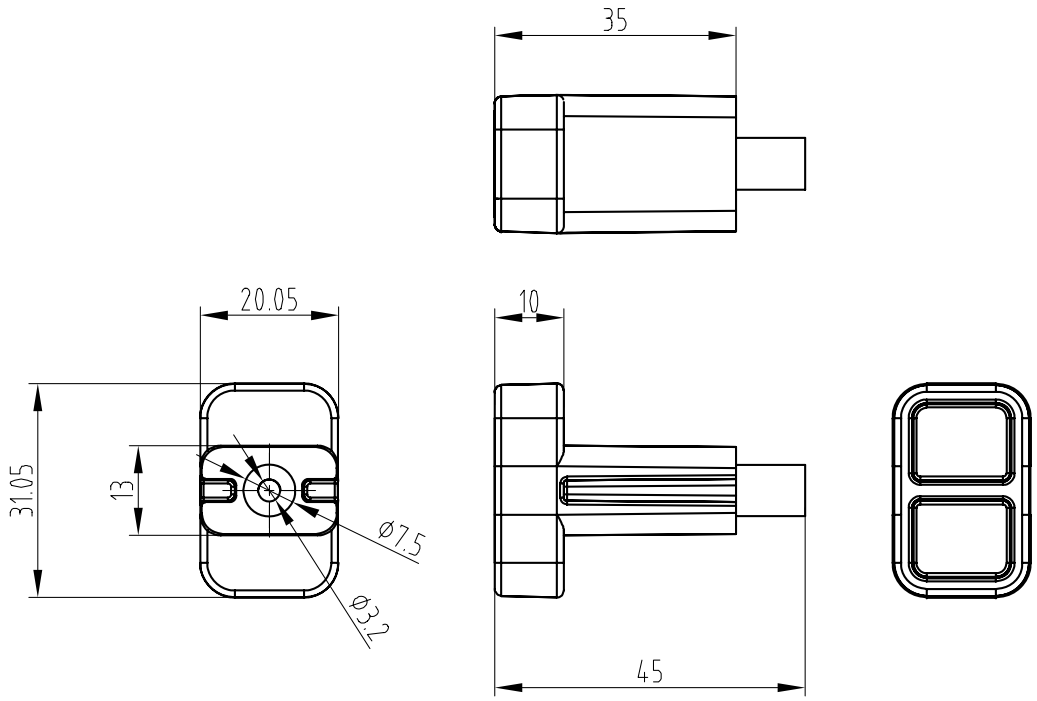

					PP K8003		NINGBO WEGRO CHOLDREN PRODUCTS CO.,LTD
Mark	Q'TY	REVISION	SIGNATURE	DATE			
DESIGN							Lower limit block
AUDIT					MARK	WEIGHT	SCARE
TECH					A1		WG07-2003
STANDARD					TOTAL PAGE	PAGE	
APPROVED							

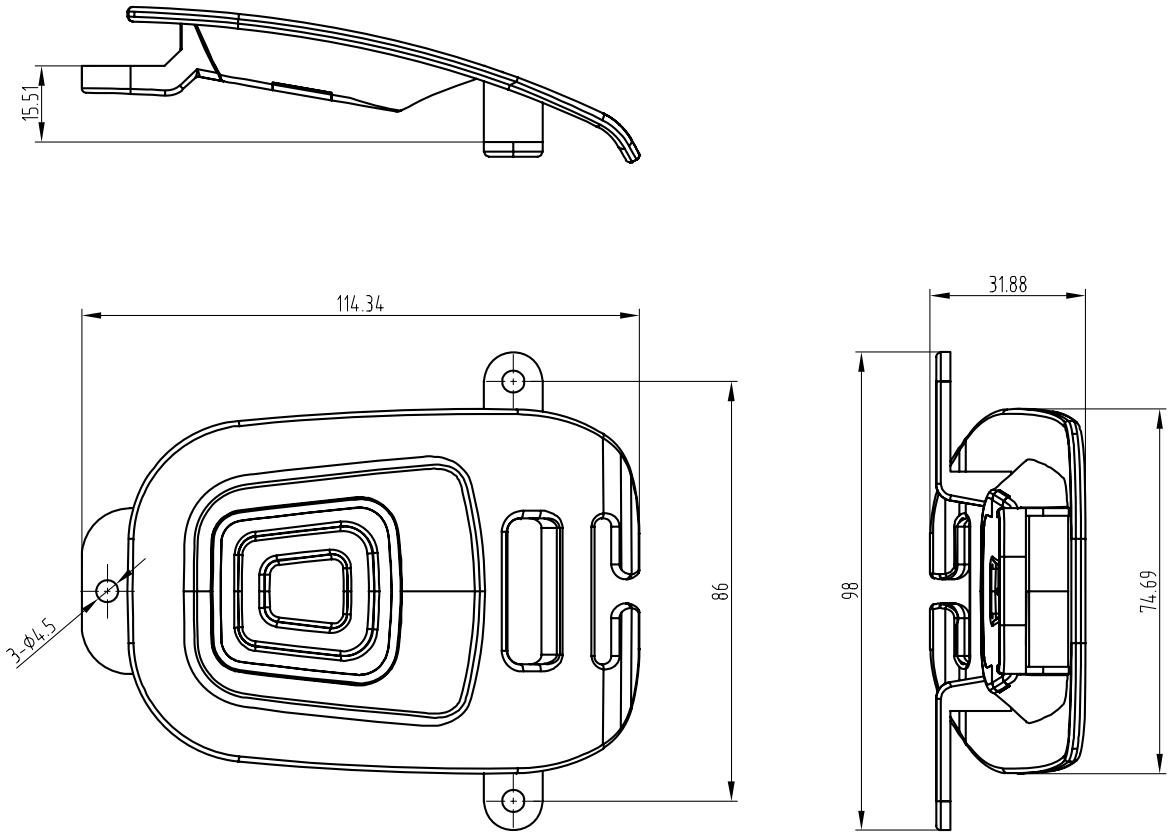

					PP K8003		NINGBO WEGRO CHOLDREN PRODUCTS CO.,LTD
Mark	Q'TY	REVISION	SIGNATURE	DATE			
DESIGN							Regulator cover
AUDIT					MARK	WEIGHT	SCARE
TECH					A1		WG07-2004
STANDARD					TOTAL PAGE	PAGE	
APPROVED							

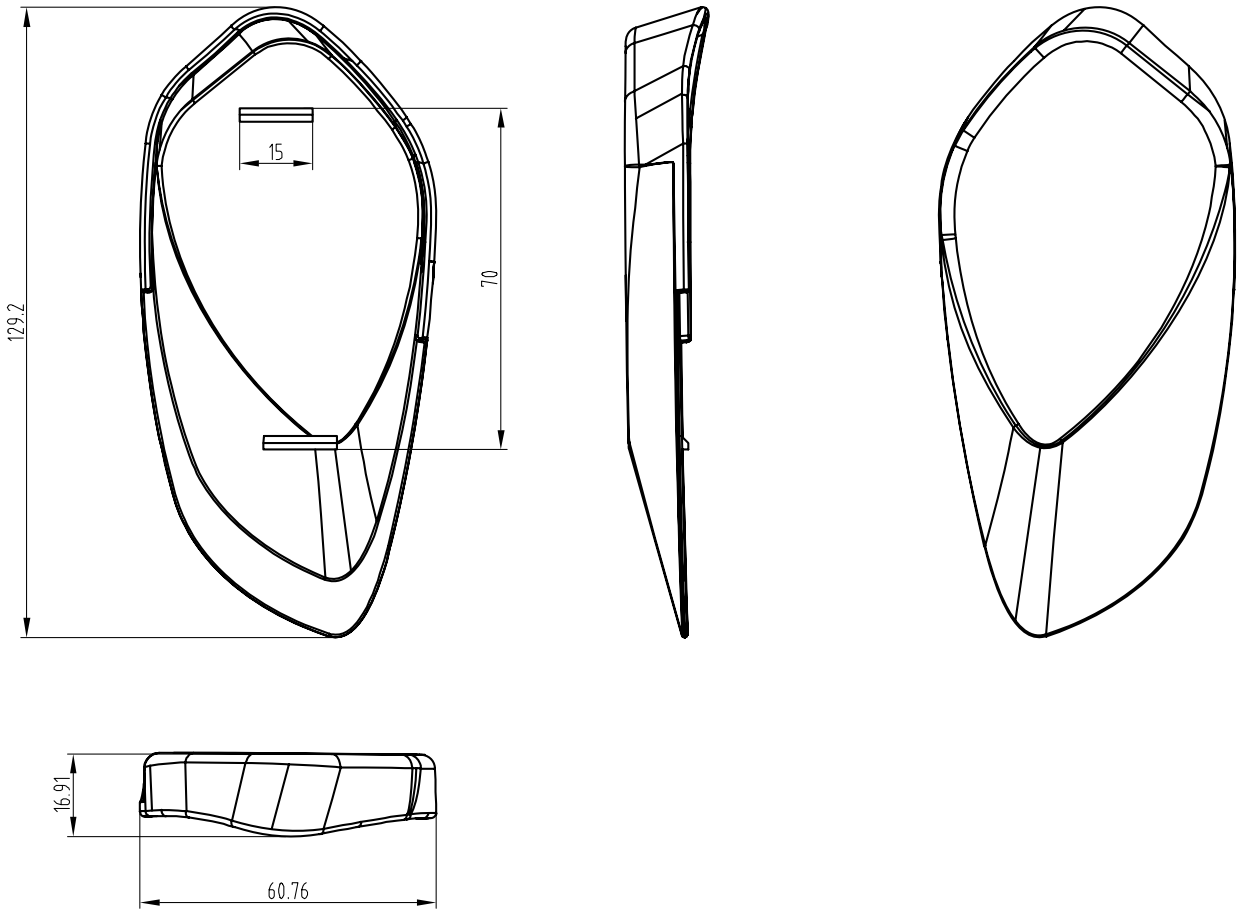

Mark	Q'TY	REVISION	SIGNATURE	DATE
DESIGN				
AUDIT				
TECH				
STANDARD				
APPROVED				

PP K8003

MARK	WEIGHT	SCARE
A1		

TOTAL PAGE PAGE

NINGBO WEGRO CHOLDREN PRODUCTS CO.,LTD

Left side protective cover

WG07-2005-1

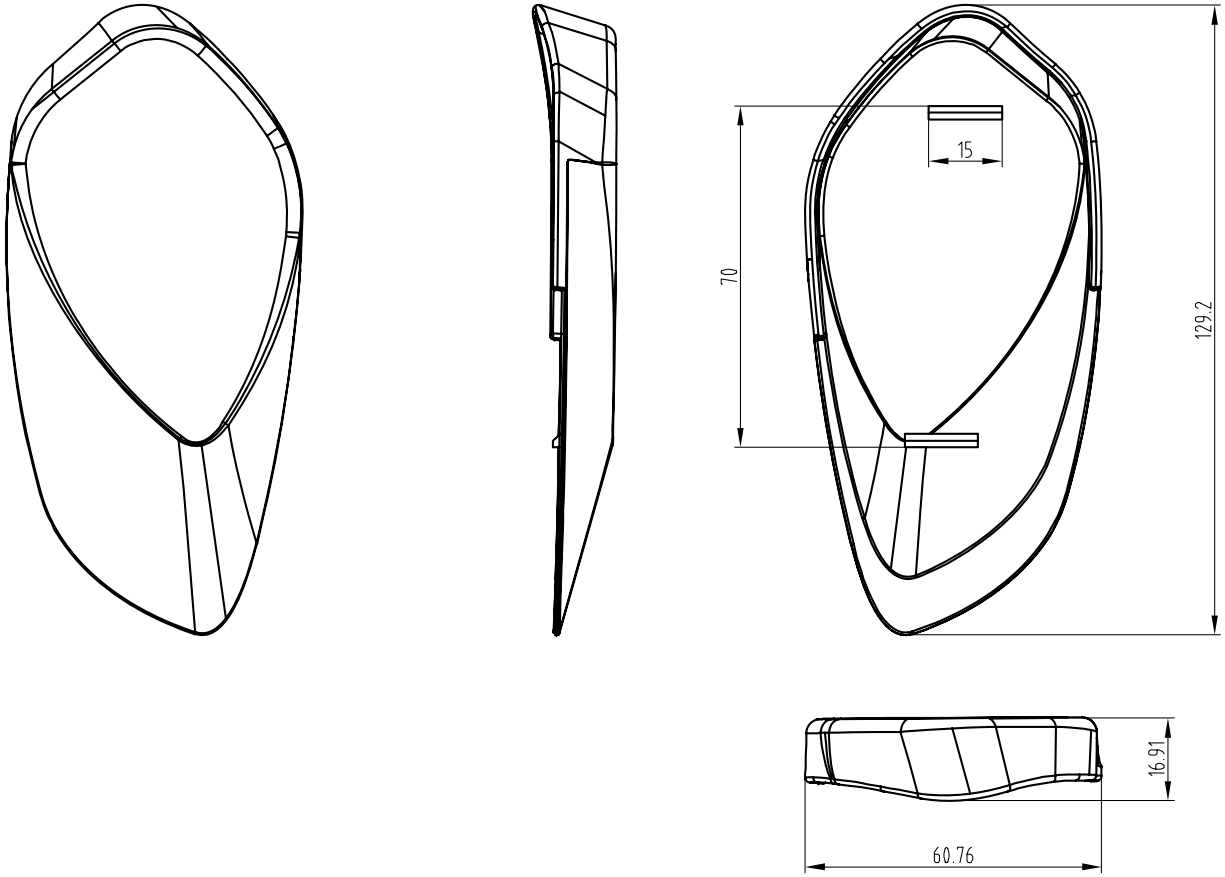

					PP K8003		NINGBO WEGRO CHOLDREN PRODUCTS CO.,LTD
Mark	Q'TY	REVISION	SIGNATURE	DATE			
DESIGN							Right side protective cover
AUDIT					MARK	WEIGHT	SCARE
TECH					A1		WG07-2005-2
STANDARD					TOTAL PAGE	PAGE	
APPROVED							

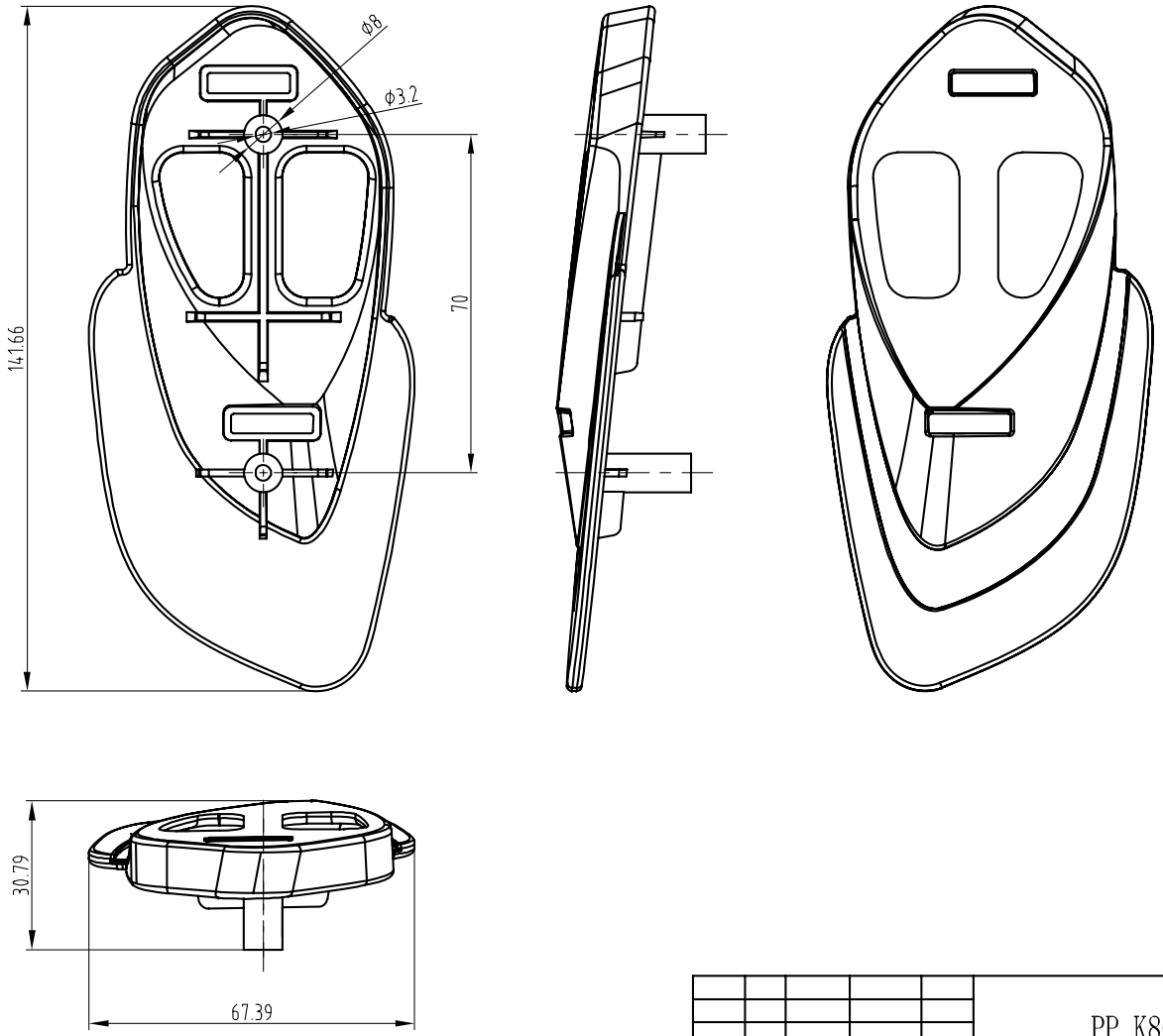

					PP K8003		NINGBO WEGRO CHOLDREN PRODUCTS CO.,LTD
Mark	Q'TY	REVISION	SIGNATURE	DATE			
DESIGN							Left Side protection body
AUDIT					MARK	WEIGHT	SCARE
TECH					A1		WG07-2006-1
STANDARD					TOTAL PAGE	PAGE	
APPROVED							

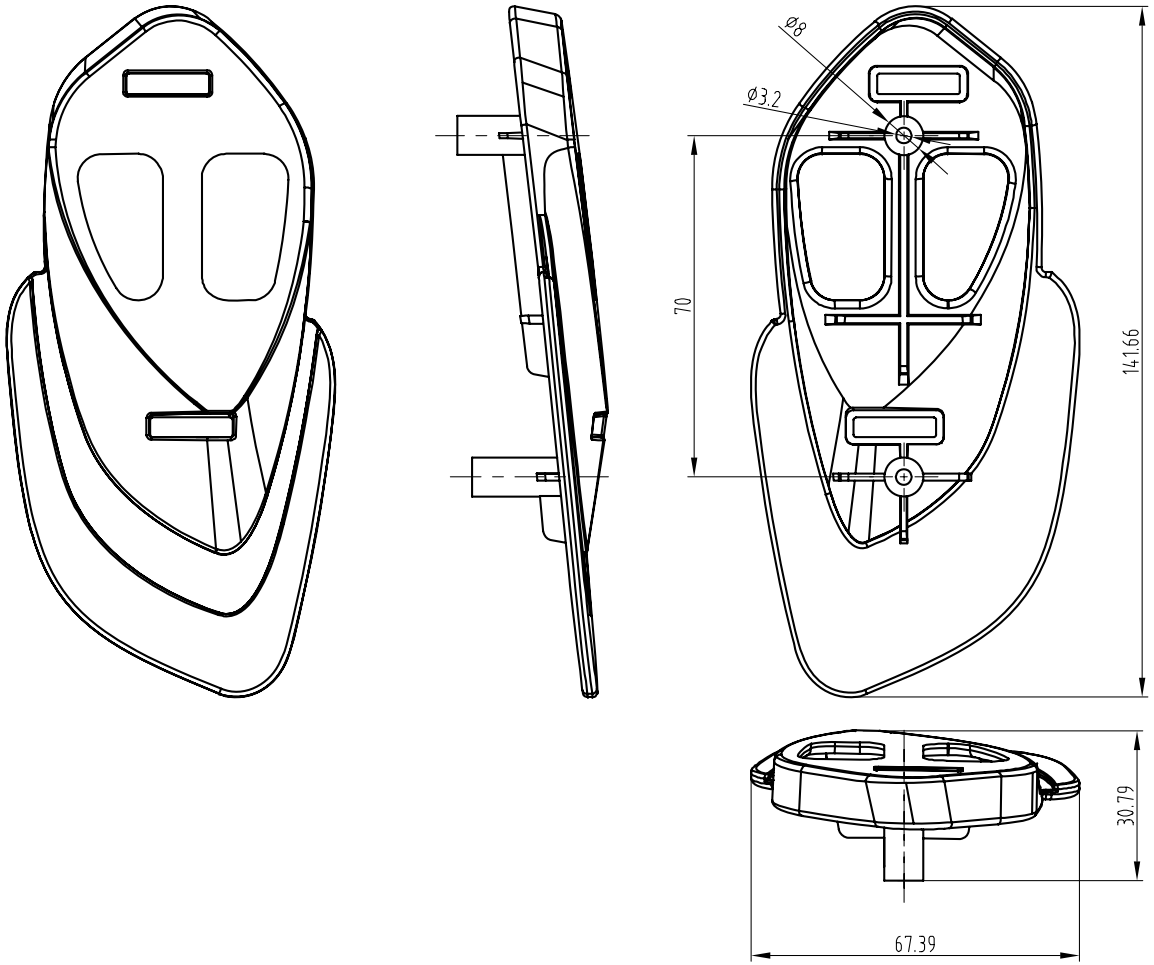

Mark	Q'TY	REVISION	SIGNATURE	DATE
DESIGN				
AUDIT				
TECH				
STANDARD				
APPROVED				

PP K8003

MARK	WEIGHT	SCARE
A1		

TOTAL PAGE PAGE

NINGBO WEGRO CHOLDREN PRODUCTS CO.,LTD

Right Side protection body

WG07-2006-2

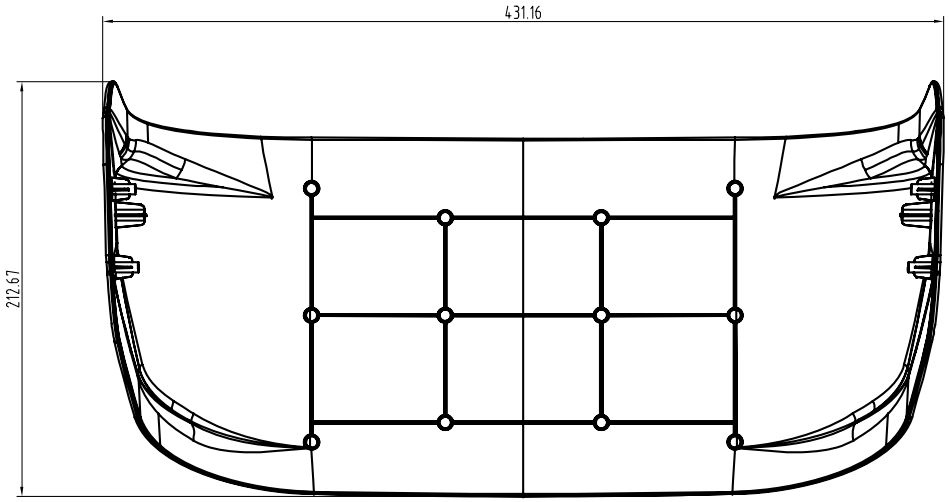

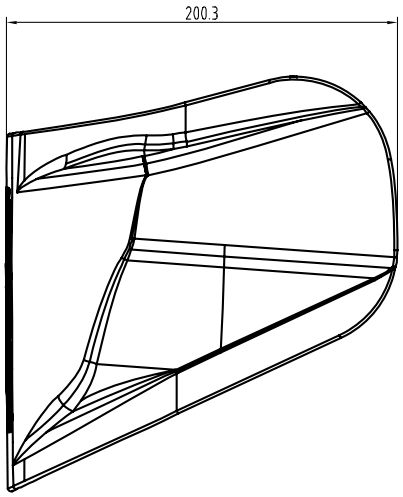

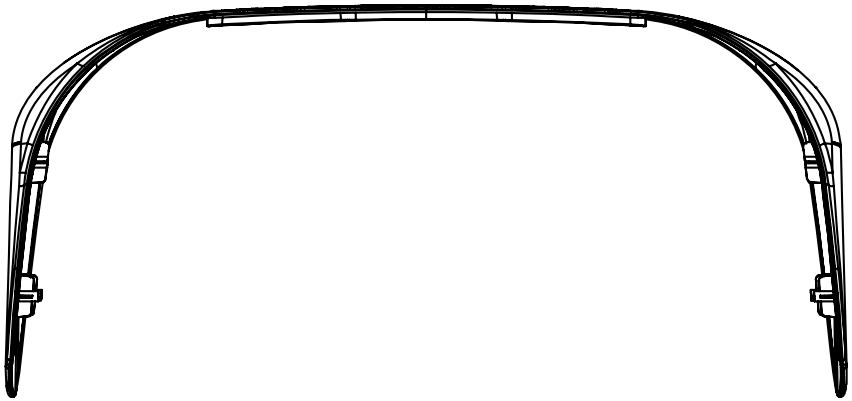

Mark	Q'TY	REVISION	SIGNATURE	DATE
DESIGN				
AUDIT				
TECH				
STANDARD				
APPROVED				

PP K8003			NINGBO WEGRO CHOLDREN PRODUCTS CO.,LTD
			Large side protection
MARK	WEIGHT	SCARE	
A1			WG07-2007
TOTAL PAGE		PAGE	

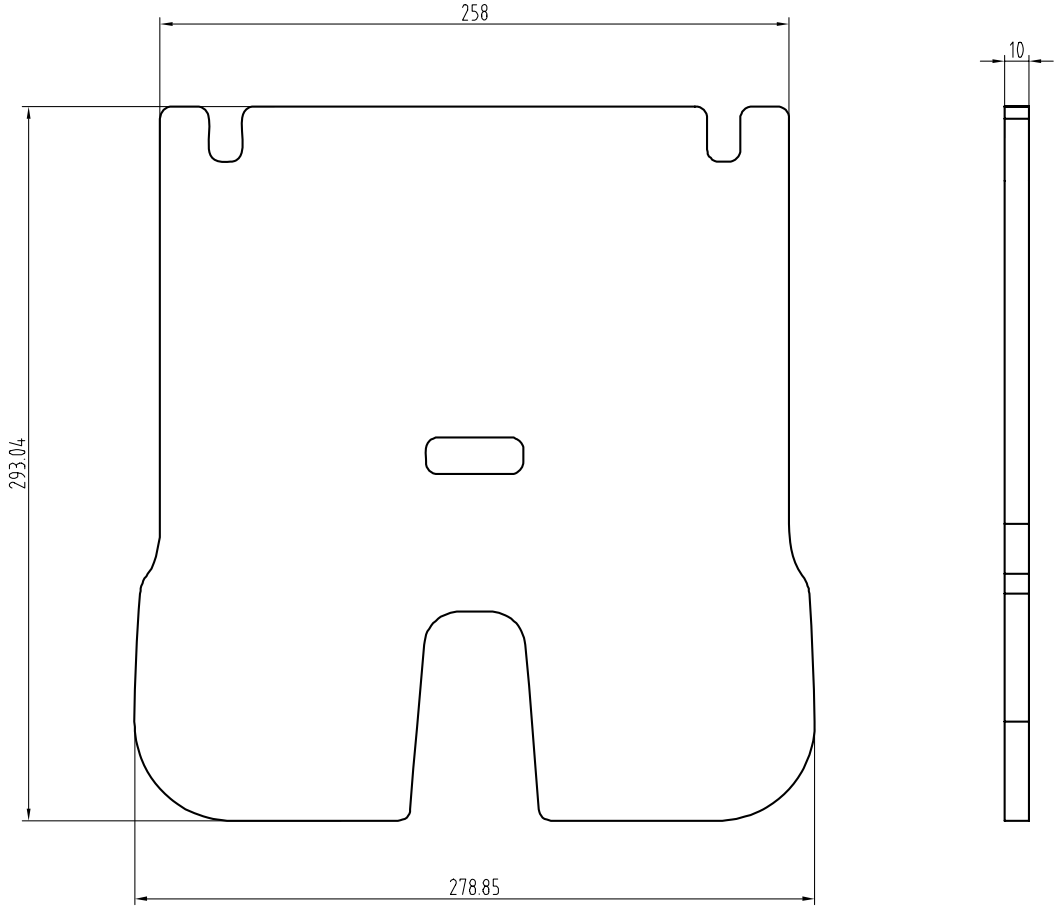

Mark	Q'TY	REVISION	SIGNATURE	DATE

DESIGN	
AUDIT	
TECH	
STANDARD	
APPROVED	

EPE

MARK	WEIGHT	SCARE
A1		

TOTAL PAGE PAGE

NINGBO WEGRO CHOLDREN PRODUCTS CO.,LTD

Cushion EPE

WG07-2008

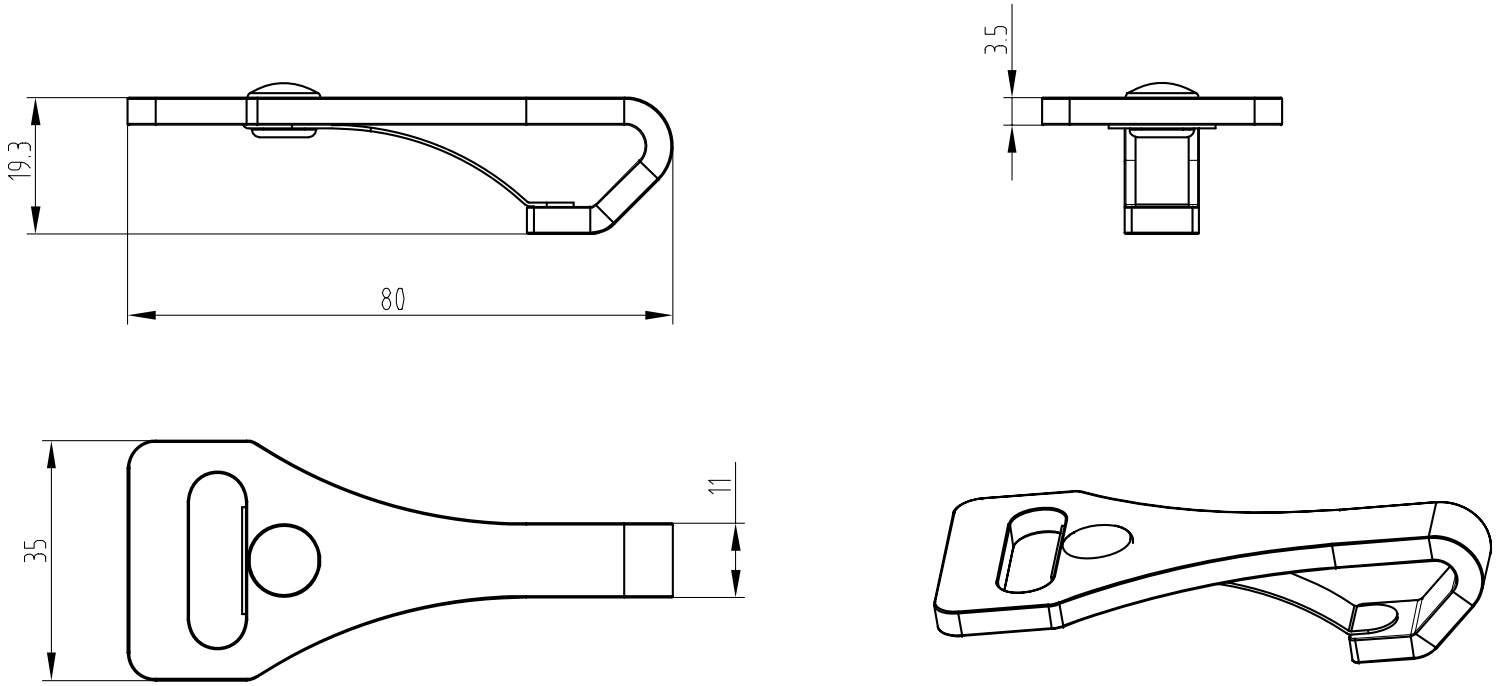

							NINGBO WEGRO CHOLDREN PRODUCTS CO.,LTD
Mark	Q'TY	REVISION	SIGNATURE	DATE			
DESIGN							top tether connector
AUDIT					MARK	WEIGHT	SCARE
TECH					A1		WG07-2009
STANDARD					TOTAL PAGE	PAGE	
APPROVED							

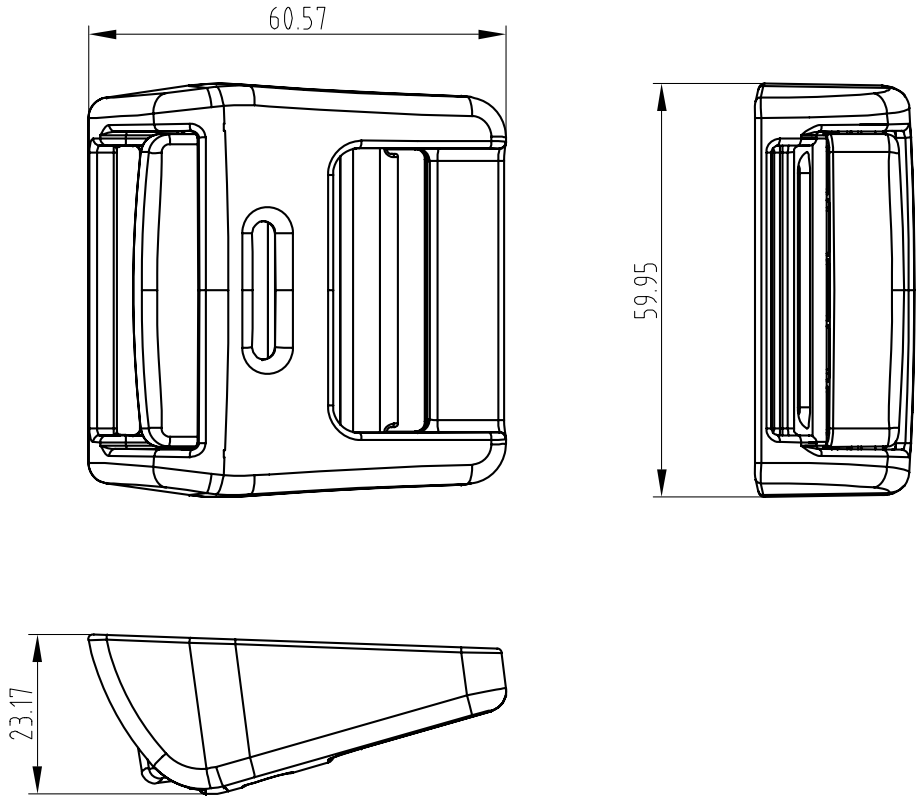

					PP		NINGBO WEGRO CHOLDREN PRODUCTS CO.,LTD
Mark	Q'TY	REVISION	SIGNATURE	DATE			
DESIGN							top-tether regulator
AUDIT					MARK	WEIGHT	SCARE
TECH					A1		WG07-2010
STANDARD					TOTAL PAGE	PAGE	
APPROVED							

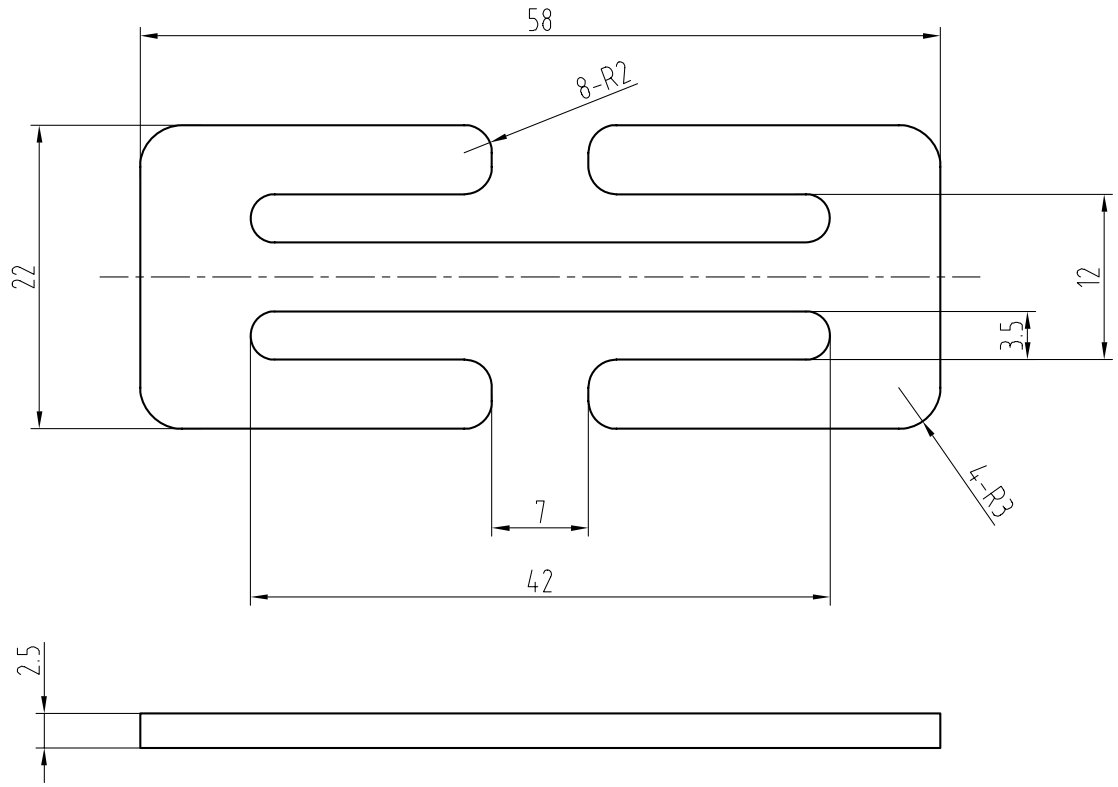

					45# Steel		NINGBO WEGRO CHOLDREN PRODUCTS CO.,LTD
Mark	Q'TY	REVISION	SIGNATURE	DATE			
DESIGN							Small Connecting plate
AUDIT					MARK	WEIGHT	SCARE
TECH					A1		WG07-2011
STANDARD					TOTAL PAGE	PAGE	
APPROVED							

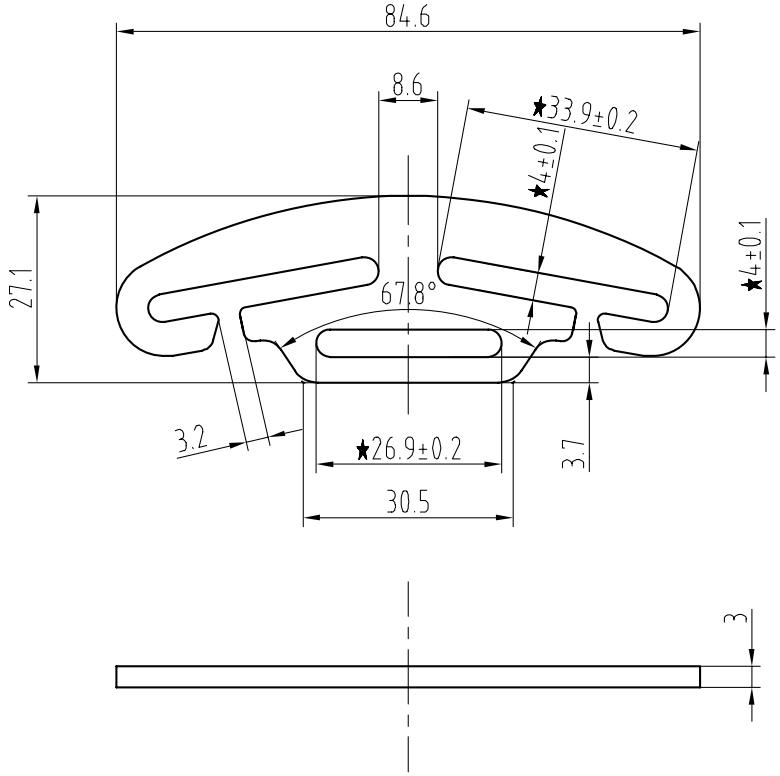

Technical requirements:
技术要求:
1. The sharp edge is blunt, the product is flat, no warping, the surface is smooth, no sharp edge;
锐边倒钝，产品平整、无翘曲，表面光洁，无尖角利边;
2. Blue-white Zinc plating, salt spray resistance test of 50H;
产品镀蓝白锌，耐50H盐雾实验;
3. Static tension test should bear more than 4000N tension.
静态拉力测试需承受大于4000N拉力;
4. Salt fog resistance test 50H.
产品耐盐雾实验50H;
5. Unmarked dimension tolerance according to IT12 grade;
未注公差按IT12公差要求。

Mark	Q'TY	REVISION	SIGNATURE	DATE

DESIGN	
AUDIT	
TECH	
STANDARD	
APPROVED	

45# Steel

MARK	WEIGHT	SCARE
A1		

TOTAL PAGE PAGE

NINGBO WEGRO CHOLDREN PRODUCTS CO.,LTD

Triple board

WG07-2012

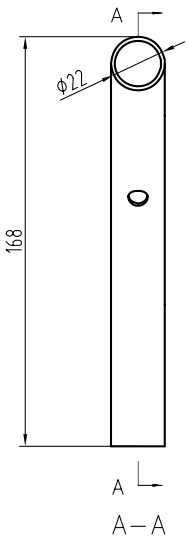

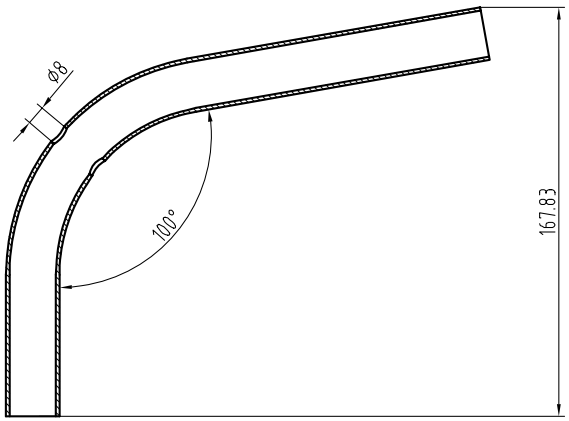

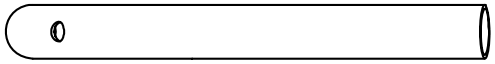

Mark	Q'TY	REVISION	SIGNATURE	DATE

DESIGN	
AUDIT	
TECH	
STANDARD	
APPROVED	

Q235			NINGBO WEGRO CHOLDREN PRODUCTS CO.,LTD
			Reinforced iron pipe
MARK	WEIGHT	SCARE	
A1			WG07-2013
TOTAL PAGE		PAGE	

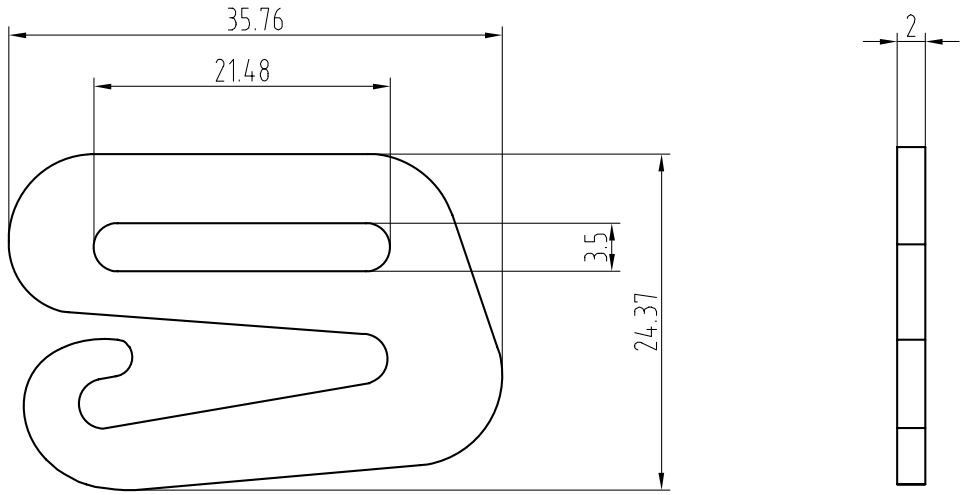

					45# Steel		NINGBO WEGRO CHOLDREN PRODUCTS CO.,LTD
Mark	Q'TY	REVISION	SIGNATURE	DATE			
DESIGN							Shoulder iron sheet
AUDIT					MARK	WEIGHT	SCARE
TECH					A1		WG07-2014
STANDARD					TOTAL PAGE	PAGE	
APPROVED							

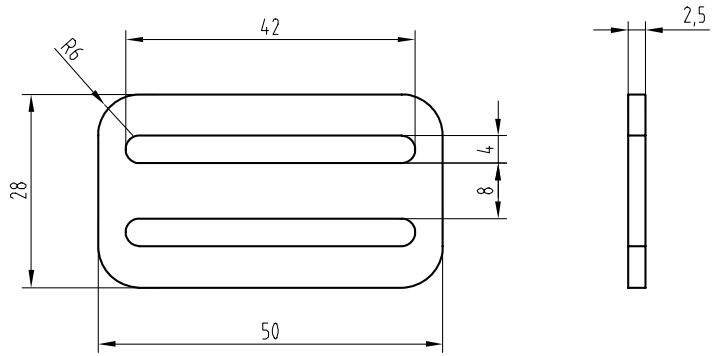

					45# Steel		NINGBO WEGRO CHOLDREN PRODUCTS CO.,LTD
Mark	Q'TY	REVISION	SIGNATURE	DATE			
DESIGN							Big Connecting plate
AUDIT					MARK	WEIGHT	SCARE
TECH					A1		WE01-14-01
STANDARD					TOTAL PAGE	PAGE	
APPROVED							

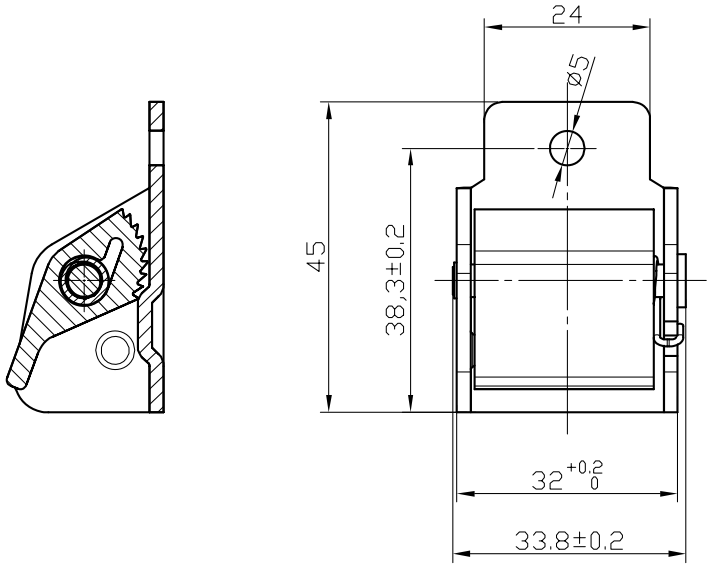

							NINGBO WEGRO CHOLDREN PRODUCTS CO.,LTD
Mark	Q'TY	REVISION	SIGNATURE	DATE			
DESIGN							Central regulator
AUDIT					MARK	WEIGHT	SCARE
TECH					A1		WE01-15
STANDARD					TOTAL PAGE	PAGE	
APPROVED							

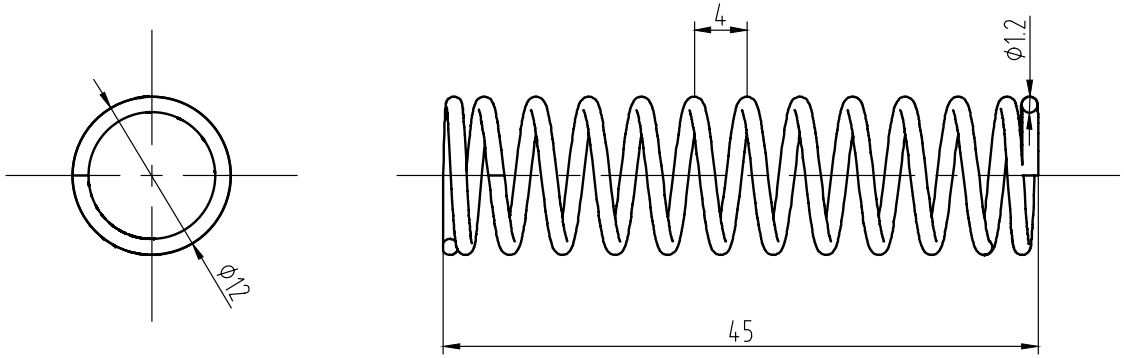

					65Mn		NINGBO WEGRO CHOLDREN PRODUCTS CO.,LTD
Mark	Q'TY	REVISION	SIGNATURE	DATE			
DESIGN							Regulator spring
AUDIT					MARK	WEIGHT	SCARE
TECH					A1		WE04-4005
STANDARD					TOTAL PAGE	PAGE	
APPROVED							

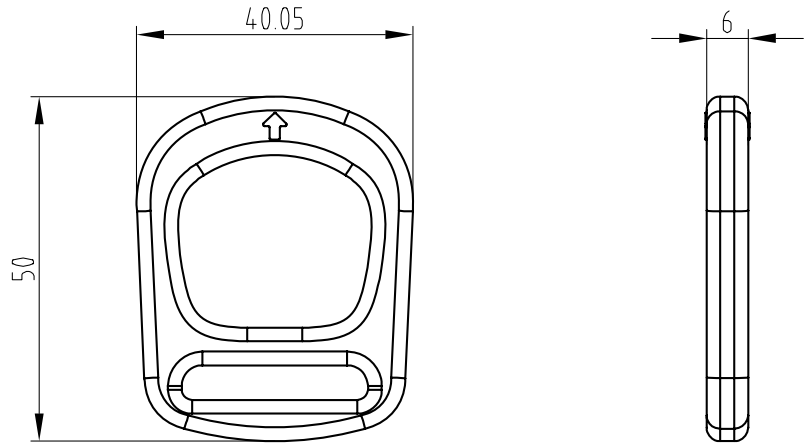

					PP		NINGBO WEGRO CHOLDREN PRODUCTS CO.,LTD
Mark	Q'TY	REVISION	SIGNATURE	DATE			
DESIGN							Pull ring
AUDIT					MARK	WEIGHT	SCARE
TECH					A1		WE04-4007
STANDARD					TOTAL PAGE	PAGE	
APPROVED							

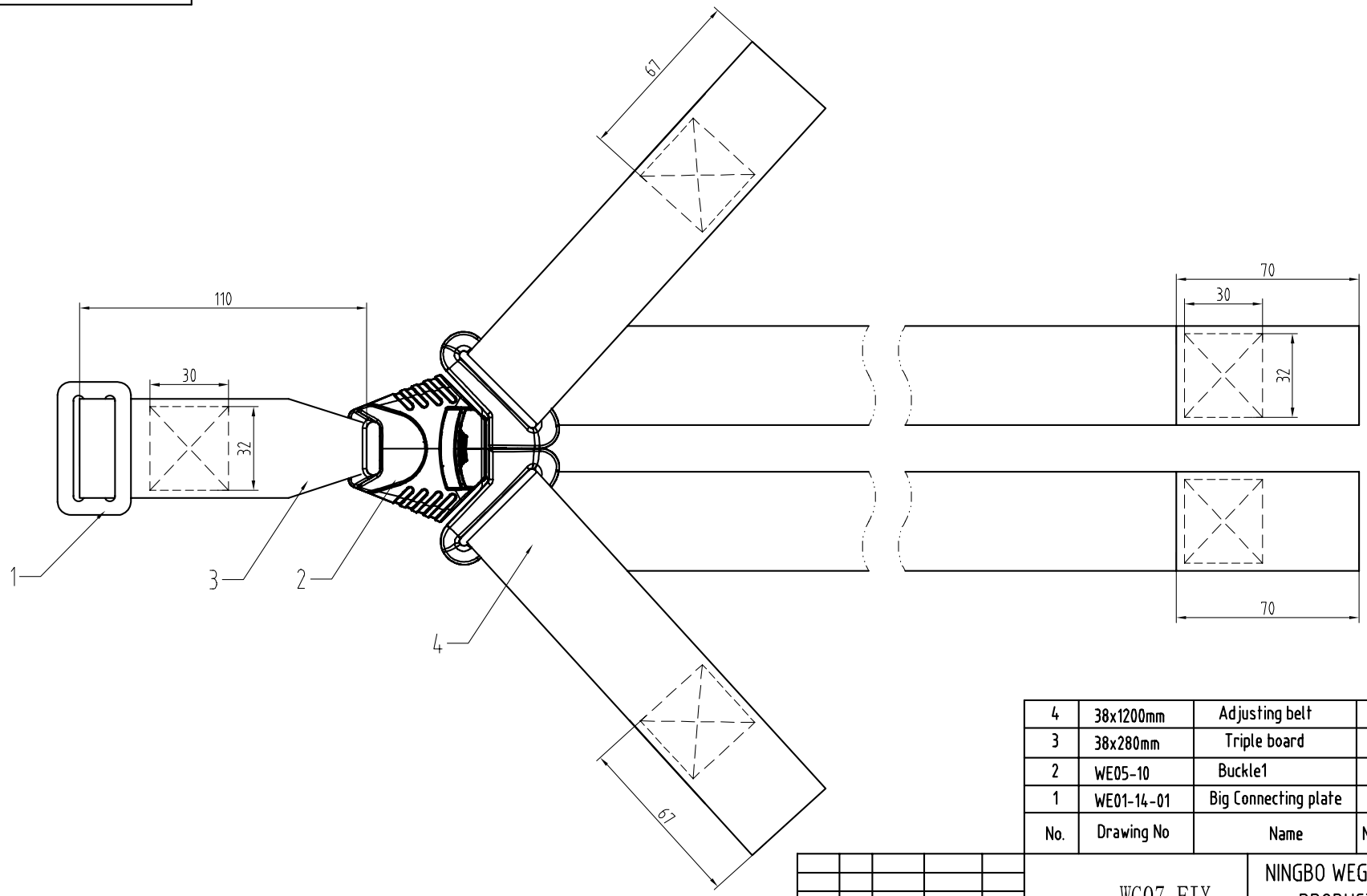

No.	Drawing No	Name	Number	Remarks
4	38x1200mm	Adjusting belt	2	
3	38x280mm	Triple board	1	
2	WE05-10	Buckle1	1	
1	WE01-14-01	Big Connecting plate	1	

Mark	Q'TY	REVISION	SIGNATURE	DATE
DESIGN				
AUDIT				
TECH				
STANDARD				
APPROVED				

WG07 FIX

NINGBO WEGRO CHOLDREN PRODUCTS CO.,LTD

Harness belt 1

MARK	WEIGHT	SCARE
A1		

TOTAL PAGE PAGE

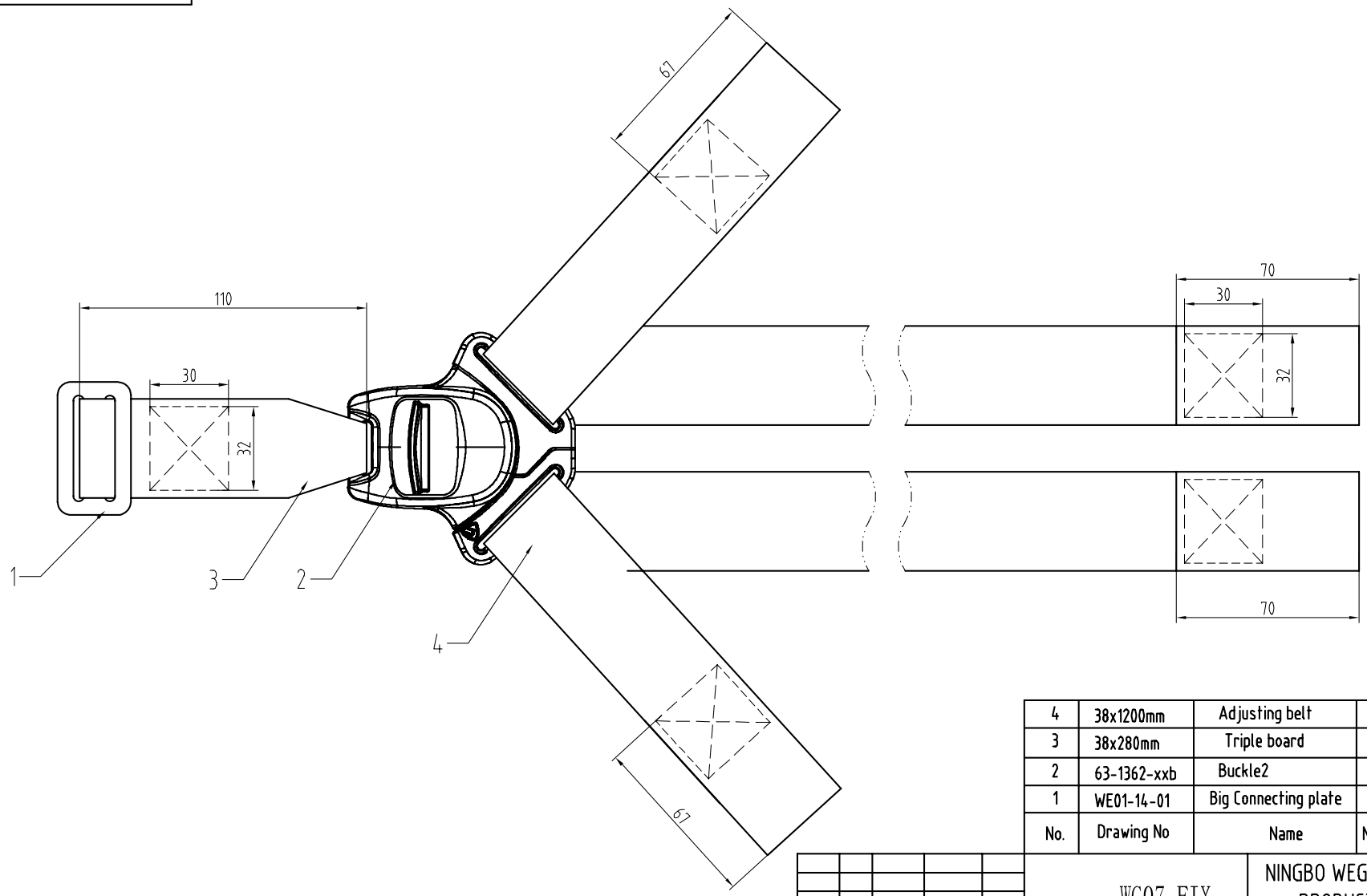

No.	Drawing No	Name	Number	Remarks
4	38x1200mm	Adjusting belt	2	
3	38x280mm	Triple board	1	
2	63-1362-xxb	Buckle2	1	
1	WE01-14-01	Big Connecting plate	1	

Mark	Q'TY	REVISION	SIGNATURE	DATE
DESIGN				
AUDIT				
TECH				
STANDARD				
APPROVED				

WG07 FIX

NINGBO WEGRO CHOLDREN PRODUCTS CO.,LTD

Harness belt 2

MARK	WEIGHT	SCARE
A1		

TOTAL PAGE PAGE

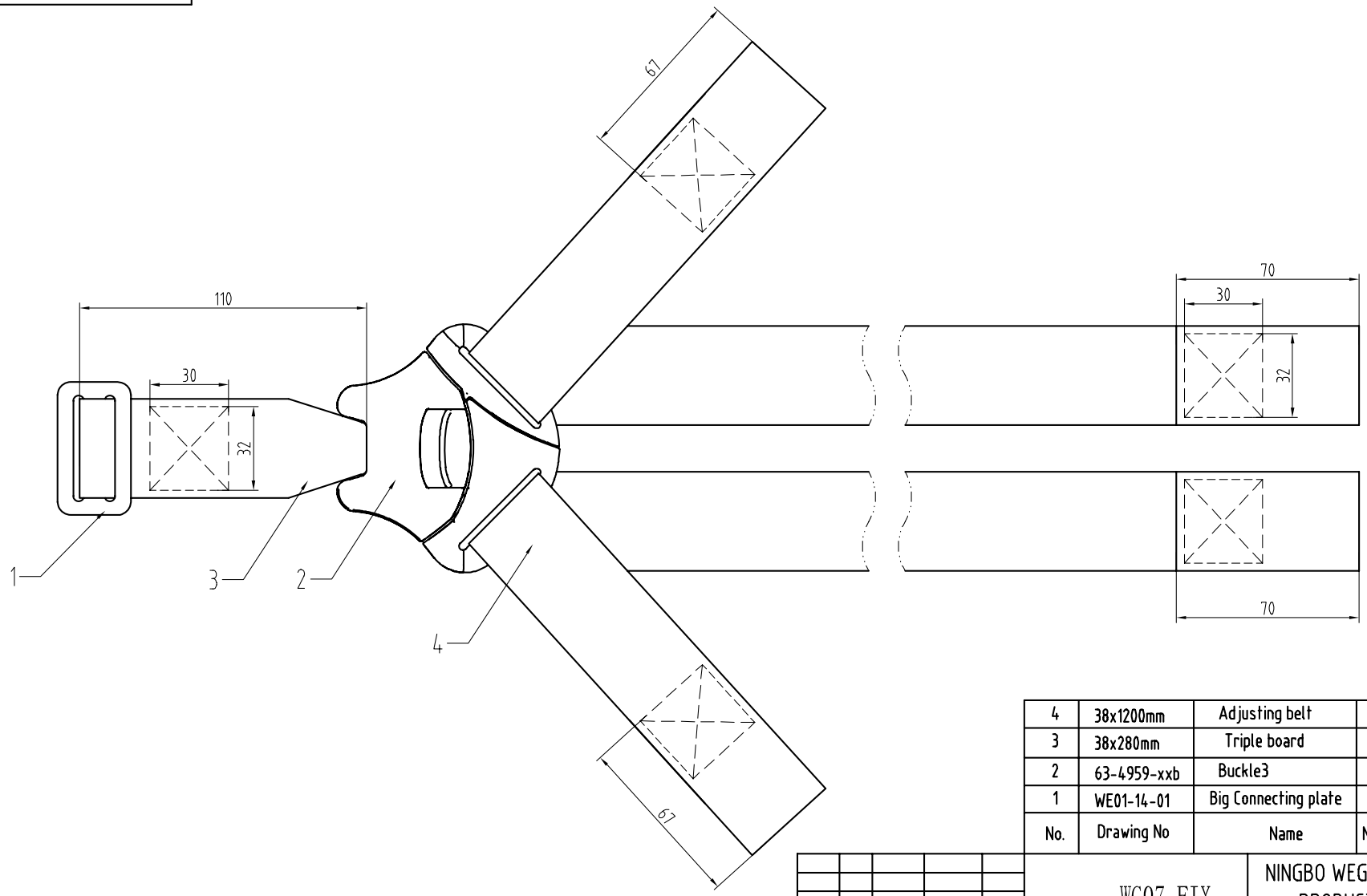

No.	Drawing No	Name	Number	Remarks
4	38x1200mm	Adjusting belt	2	
3	38x280mm	Triple board	1	
2	63-4959-xxb	Buckle3	1	
1	WE01-14-01	Big Connecting plate	1	

Mark	Q'TY	REVISION	SIGNATURE	DATE
DESIGN				
AUDIT				
TECH				
STANDARD				
APPROVED				

WG07 FIX

NINGBO WEGRO CHOLDREN PRODUCTS CO.,LTD

Harness belt 3

MARK	WEIGHT	SCARE
A1		

TOTAL PAGE PAGE

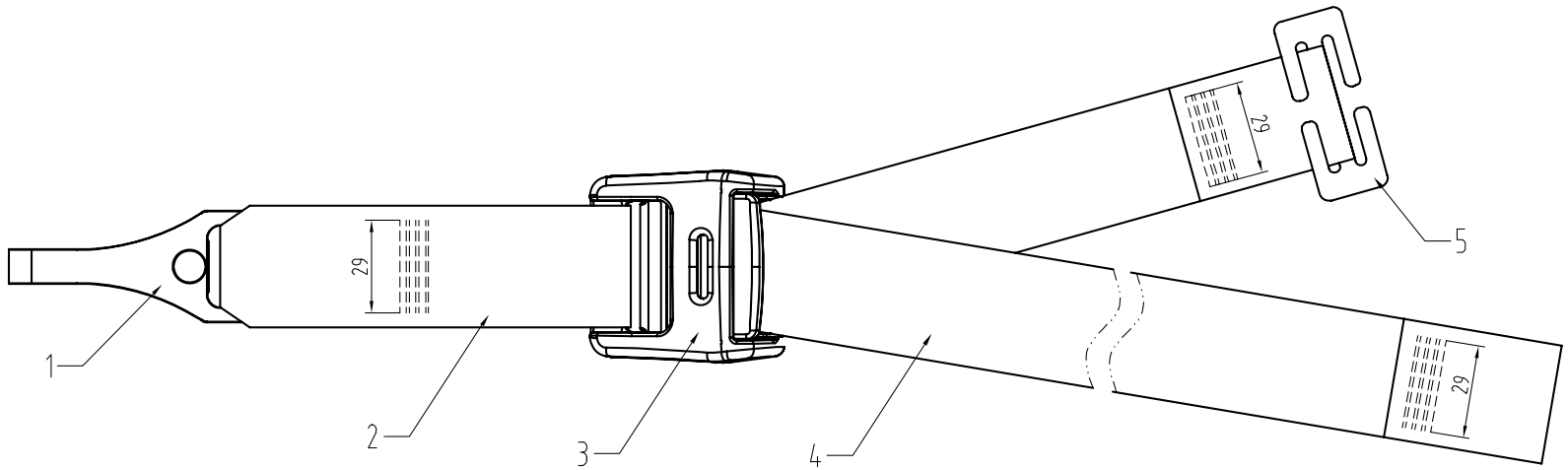

No.	Drawing No	Name	Number	Remarks
5	WG07-2011	Small Connecting plate	1	
4	38x2380mm	top tether strap 1	1	
3	WG07-2010	top-tether regulator	1	
2	38x300mm	top tether strap 2	1	
1	WG07-2009	top tether connector	1	

Mark	Q'TY	REVISION	SIGNATURE	DATE

DESIGN	
AUDIT	
TECH	
STANDARD	
APPROVED	

WG07 FIX

NINGBO WEGRO CHOLDREN PRODUCTS CO.,LTD

top-tether assembly

MARK	WEIGHT	SCARE
A1		

TOTAL PAGE PAGE

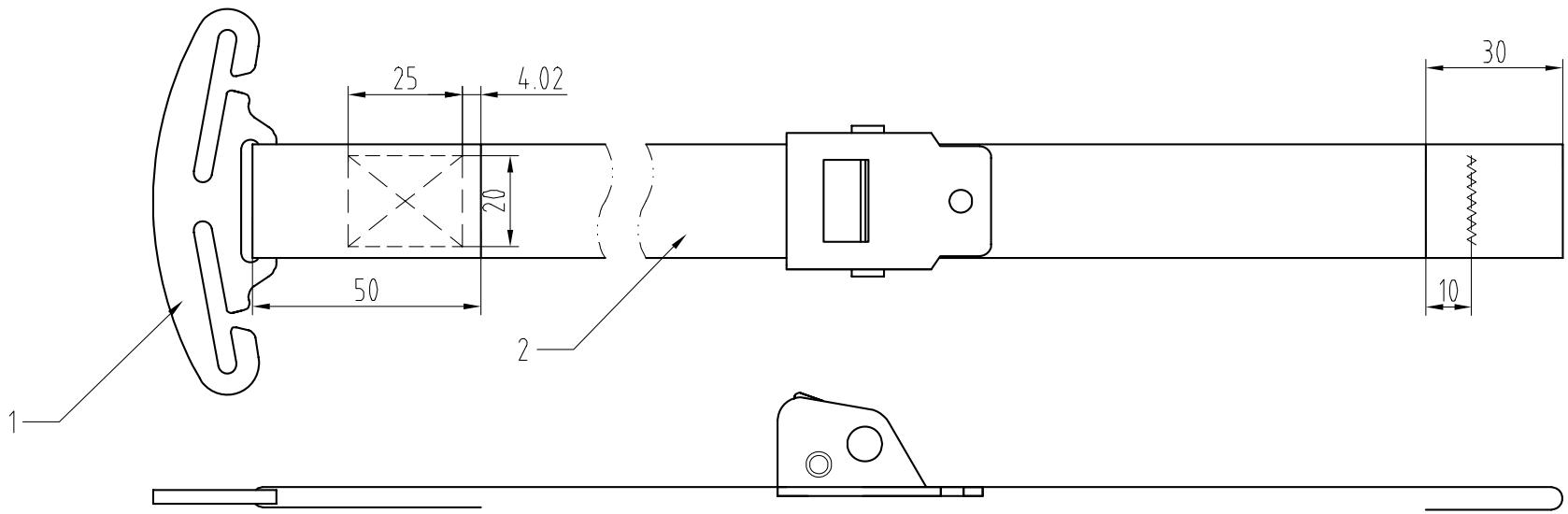

No.	Drawing No	Name	Number	Remarks
2	25x950mm	Adjusting belt	1	
1	WG07-2012	Triple board	1	

Mark	Q'TY	REVISION	SIGNATURE	DATE

DESIGN	
AUDIT	
TECH	
STANDARD	
APPROVED	

WG07 FIX

NINGBO WEGRO CHOLDREN PRODUCTS CO.,LTD

Adjusting belt assembly

MARK	WEIGHT	SCARE
A1		

TOTAL PAGE PAGE

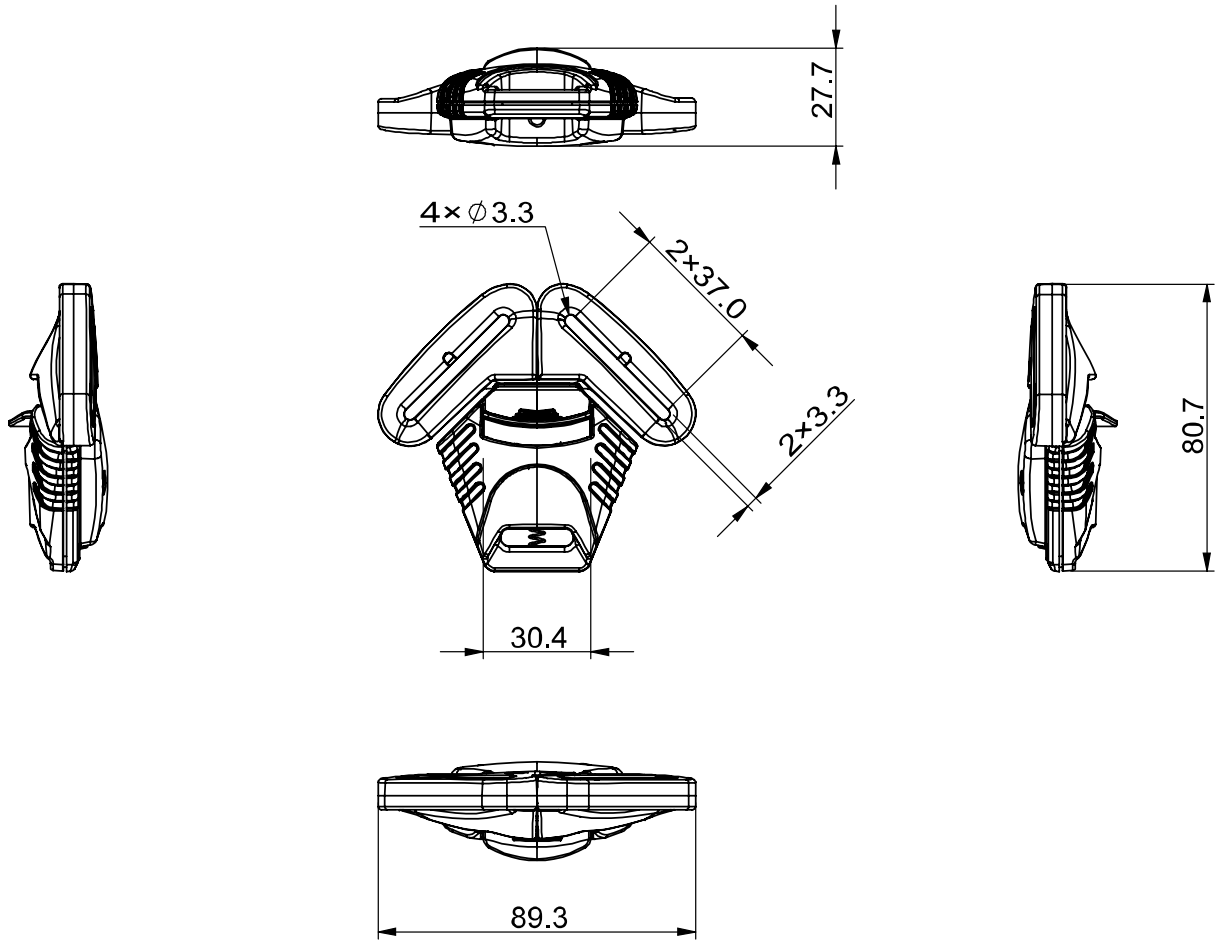

								NINGBO WEGRO CHOLDREN PRODUCTS CO.,LTD
Mark	Q'TY	REVISION	SIGNATURE	DATE				
DESIGN								Buckle1
AUDIT					MARK	WEIGHT	SCARE	
TECH					A1			WE05-10
STANDARD					TOTAL PAGE		PAGE	
APPROVED								

This drawing remains our property and must not without our permission be copied, shown or distributed to competitive companies or any unauthorized persons (Law of 29 of May 1931)

Issue	Grid	Qty.	Modification	NUFD no.	CO number	CO issue date	Iss. by
2B	2		Add dimensions and regulation code in notes		18029	2018-03-23	AC
1B			New Drawing			2017-12-22	RC

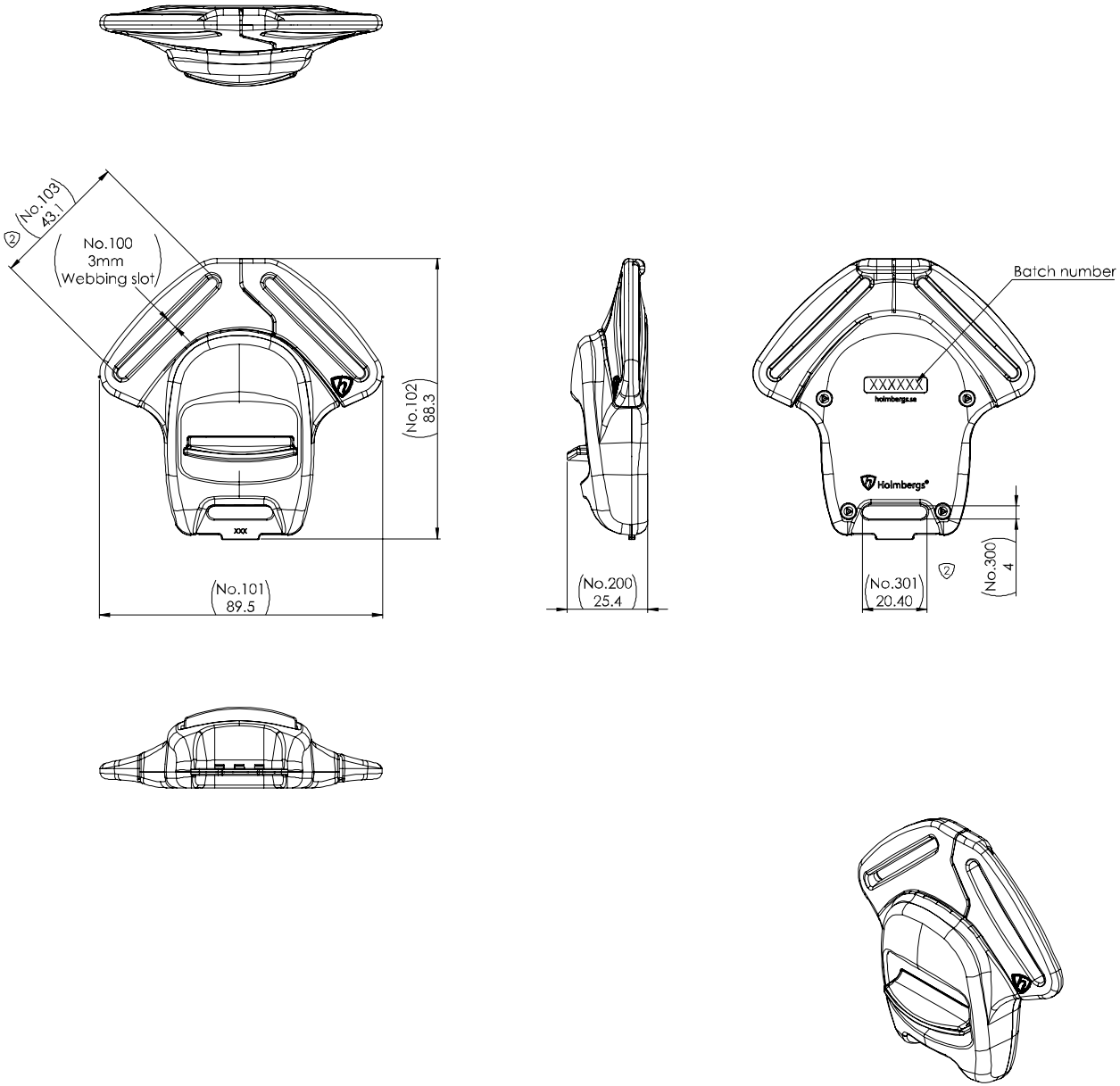

NOT FOR PRODUCTION
ONLY FOR IDENTIFICATION

2

No.3 Buckle assy 63-1362-xx shall fulfill demands acc. to ECE R44 & R129

Part no. 63-1362-00	SAGA Buckle, 3mm Web Slots	Weight No.2 g
Reference drawing only, not for production.	All dimensions are subject for tolerances.	
Holmbergs *protects you.*	www.holmbergs.se	Do not scale E Dim. in mm
Material No.1		Scale 1:1
Customer Reference		A2
Title SAGA Buckle, 3mm Web Slots		SolidWorks
Project No.	Part of / Replaces	Sheet/Draft 1 of 1
Drawn RC 2017-12-22 / Approved RC 2017-12-22	Drawing No. 63-1362-XX	Issue 2B
Status Approved		

This drawing remains our property and must not without our approval be copied, shown or distributed to competitive companies or any unauthorized persons (Law of 29 of May 1931)

Issue	Grid	Modification	CO number	CO issue date	Iss. by

VIEW FRAME 1	No.100-105
⊖	

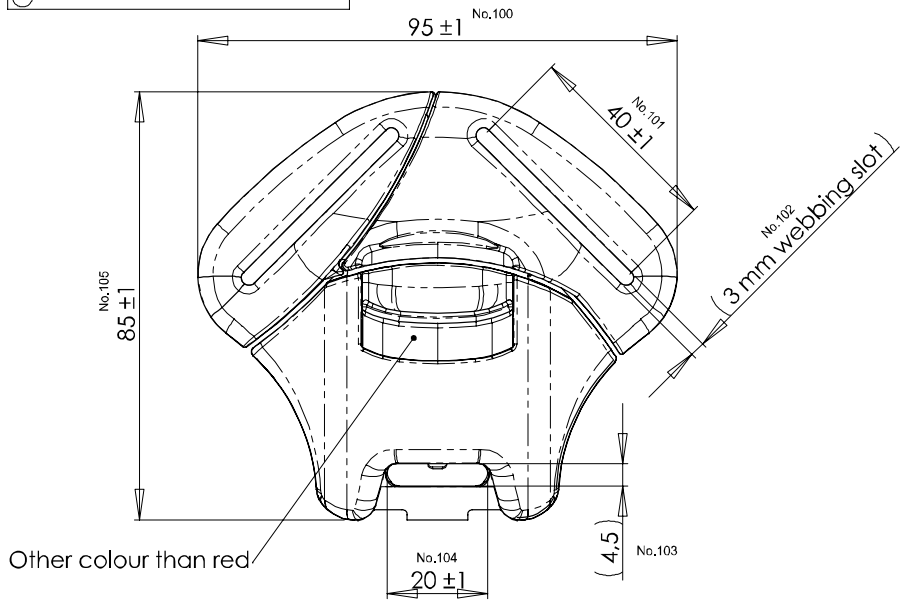

VIEW FRAME 2	No.200-200
⊖	

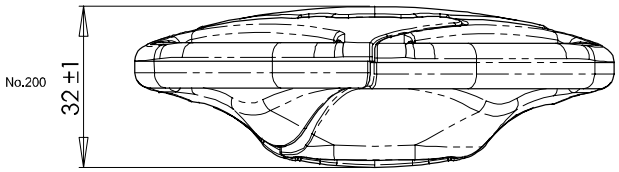

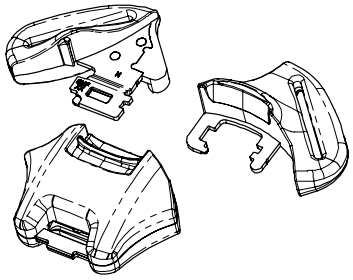

Scale 1:2

NOT FOR PRODUCTION
ONLY FOR IDENTIFICATION

VIEW FRAME 0	No.1-4
⊖	

No.4 Batch no. explanation: Ex. N2045, N=new ejector 66-4969-00, 2=year 2002, 045=batch no. 45

No.3 Buckle assy 63-4959-XX shall fulfil demands acc. to ECE R44

Part name	Material
Tongues	PA/Carbon steel
Covers	PC/ABS
Steel parts	Carbon steel
Springs	Spring steel
Button	PA
Ejector	PA

Part No. 63-4959-08	BUCKLE GR.1 3/5 ASSY 3 mm WEBBING SLOTS, ANTHRACITE	
Part No. 63-4959-02	BUCKLE GR.1 3/5 ASSY 3 mm WEBBING SLOTS, NAVY BLUE	
Part No. 63-4959-01	BUCKLE GR.1 3/5 ASSY 3 mm WEBBING SLOTS, GREY	Weight No.2
Part No. 63-4959-00	BUCKLE GR.1 3/5 ASSY 3 mm WEBBING SLOTS, BLACK	132 g

Product Characteristics Classification			General Tolerances									
Characteristic	Symbols		Linerar dimensions						Radius			Angular dimensions
	for text	for dimensions	0.5 up to 6	over 6 up to 30	over 30 up to 120	over 120 up to 400	over 400 up to 1000	over 1000 up to 2000	0.5 up to 3	over 3 up to 6	over 6	
Critical	CC	..../CC										
Significant	SC	..../SC	±0.1	±0.2	±0.3	±0.5	±0.8	±1.2	±0.2	±0.5	±1	±0.5°

Holmbergs protects you.
S-334 21 Anderstorp
Sweden

Classification [CC]/[SC]

Do not scale
Dim. in mm

Material No.1			Scale 1:1
Customer Reference			A3
Titel BUCKLE GR.1 3/5 ASSY, 3mm WEBBING SLOTS			SolidWorks
Project No. 02058	Part of	Replaces 63-4959-XX	Sheet/Draft 1 of 1

Drawn	Checked	Approved	Date	Drawing No.	Issue
JW			2003-06-17	63-4959-XX	4B
Source drawing no.					
kh63_4959_xx_1_1_4b					

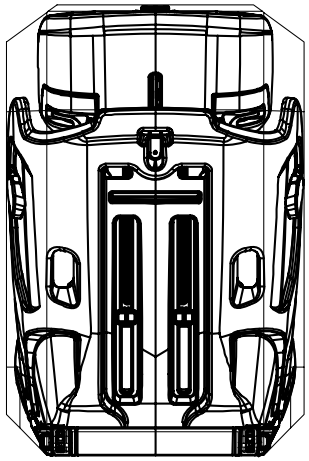

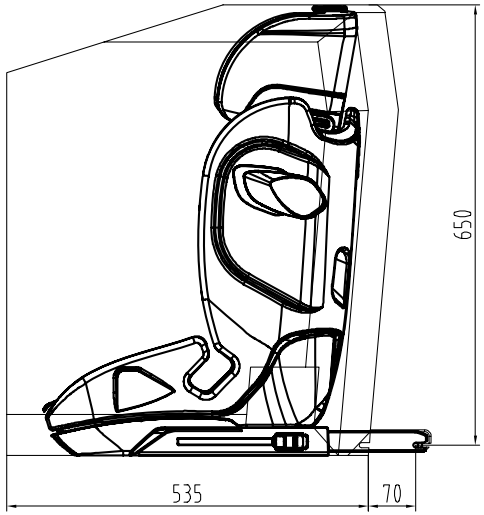

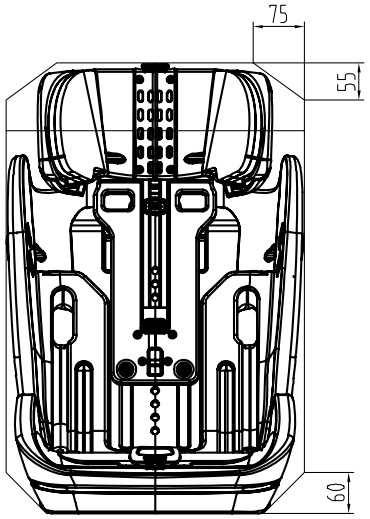

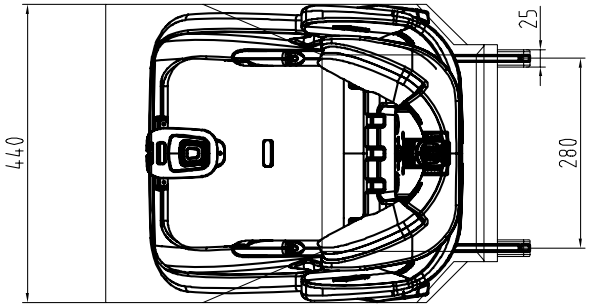

					WG07 FIX			NINGBO WEGRO CHOLDREN PRODUCTS CO.,LTD
Mark	Q'TY	REVISION	SIGNATURE	DATE				
DESIGN								ISO/F2X
AUDIT					MARK	WEIGHT	SCARE	
TECH					A1			
STANDARD					TOTAL PAGE		PAGE	
APPROVED								

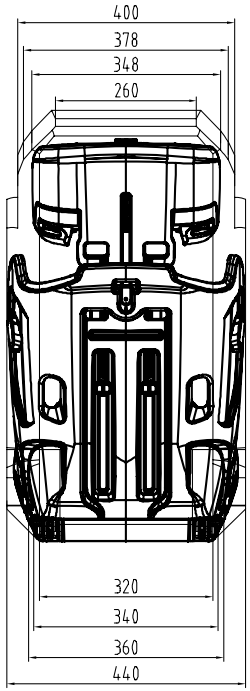

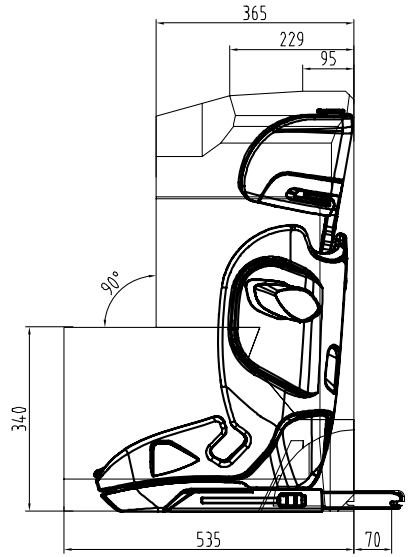

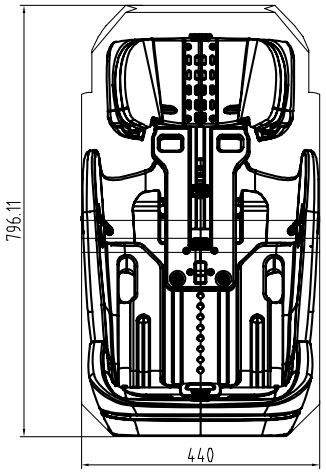

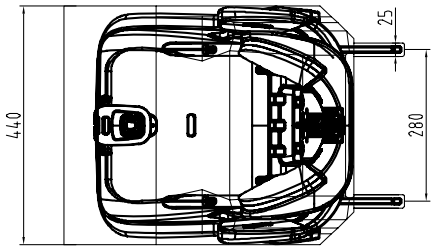

					WG07 FIX		NINGBO WEGRO CHOLDREN PRODUCTS CO.,LTD
Mark	Q'TY	REVISION	SIGNATURE	DATE			
DESIGN							ISO/B2
AUDIT					MARK	WEIGHT	SCARE
TECH					A1		
STANDARD					TOTAL PAGE	PAGE	
APPROVED							

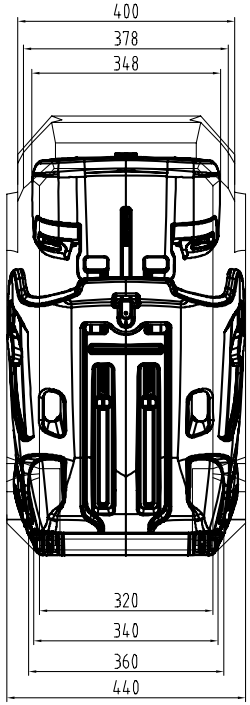

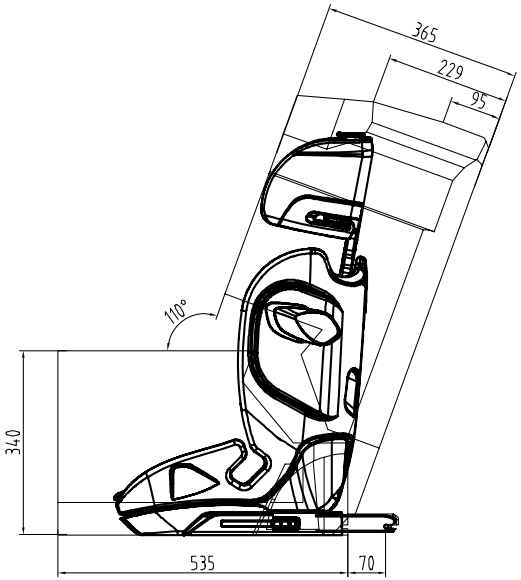

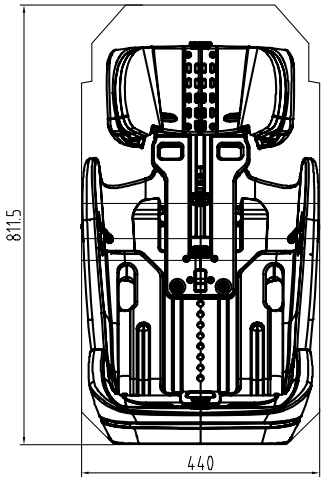

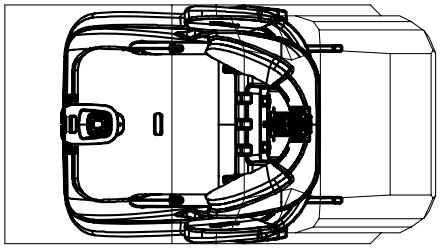

Mark	Q'TY	REVISION	SIGNATURE	DATE
DESIGN				
AUDIT				
TECH				
STANDARD				
APPROVED				

WG07 FIX			NINGBO WEGRO CHOLDREN PRODUCTS CO.,LTD
MARK	WEIGHT	SCARE	ISO/B2
A1			
TOTAL PAGE		PAGE	

1.Brand position

2.76-87CM LABEL POSTION

3.0-15M Warning label position

4.Belt routing lable postion

5.ECE label position

6.Molding time

WG07 FIX ECE Lable

size： 3*4.5cm

WG07 FIX 0-15M warning lable
Size : 4x4cm
Thickness: 0.1mm

Black C
White C
PANTONE 1795 C
PANTONE Process Yellow C

WG07 FIX 76-87Cm lable

Size : 3.5x4.6cm

Thickness: 1mm

pantone

Aluminium 877

WG07 FIX Belt routing lable

Size : 12x18cm

Thickness: 0.1mm

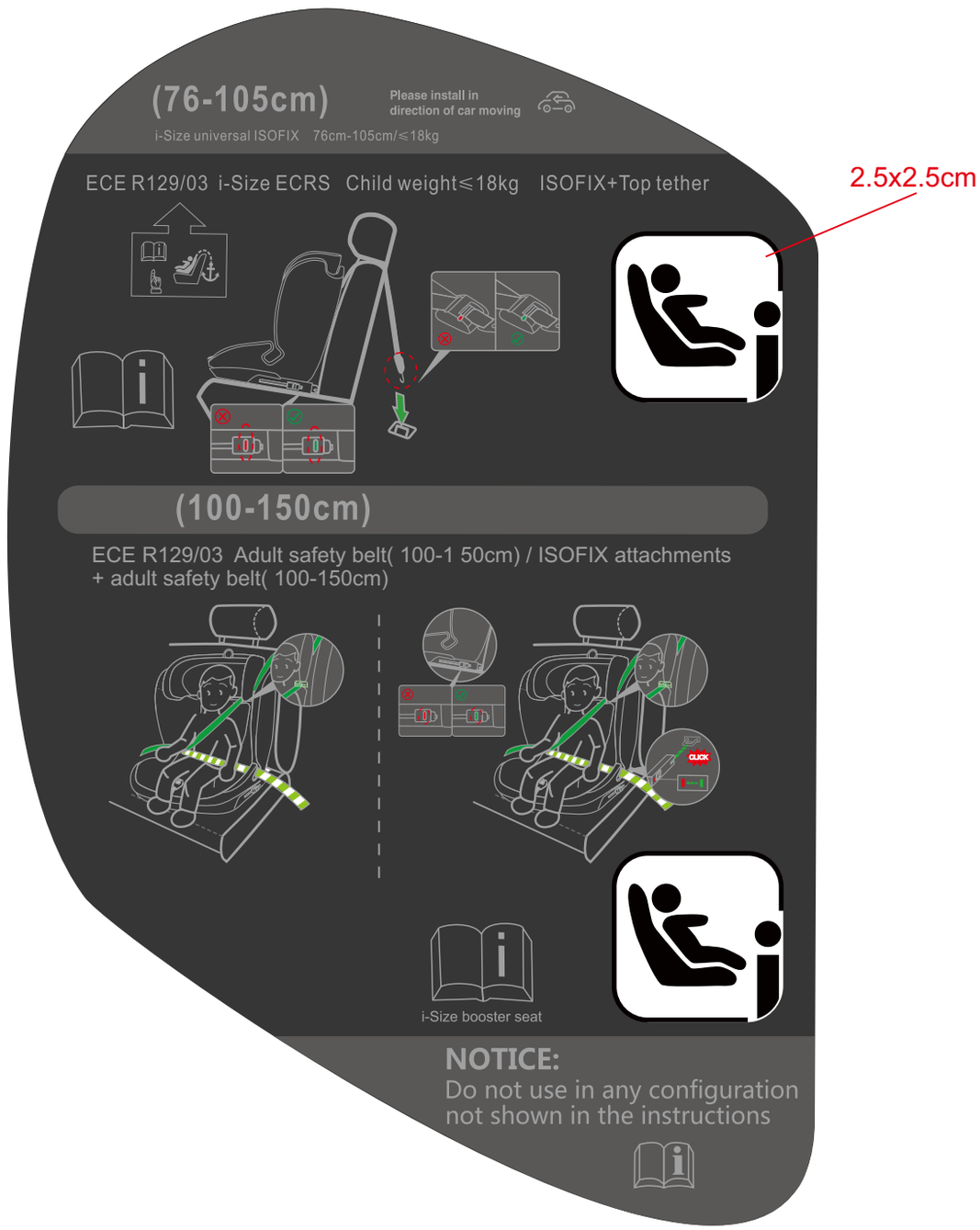

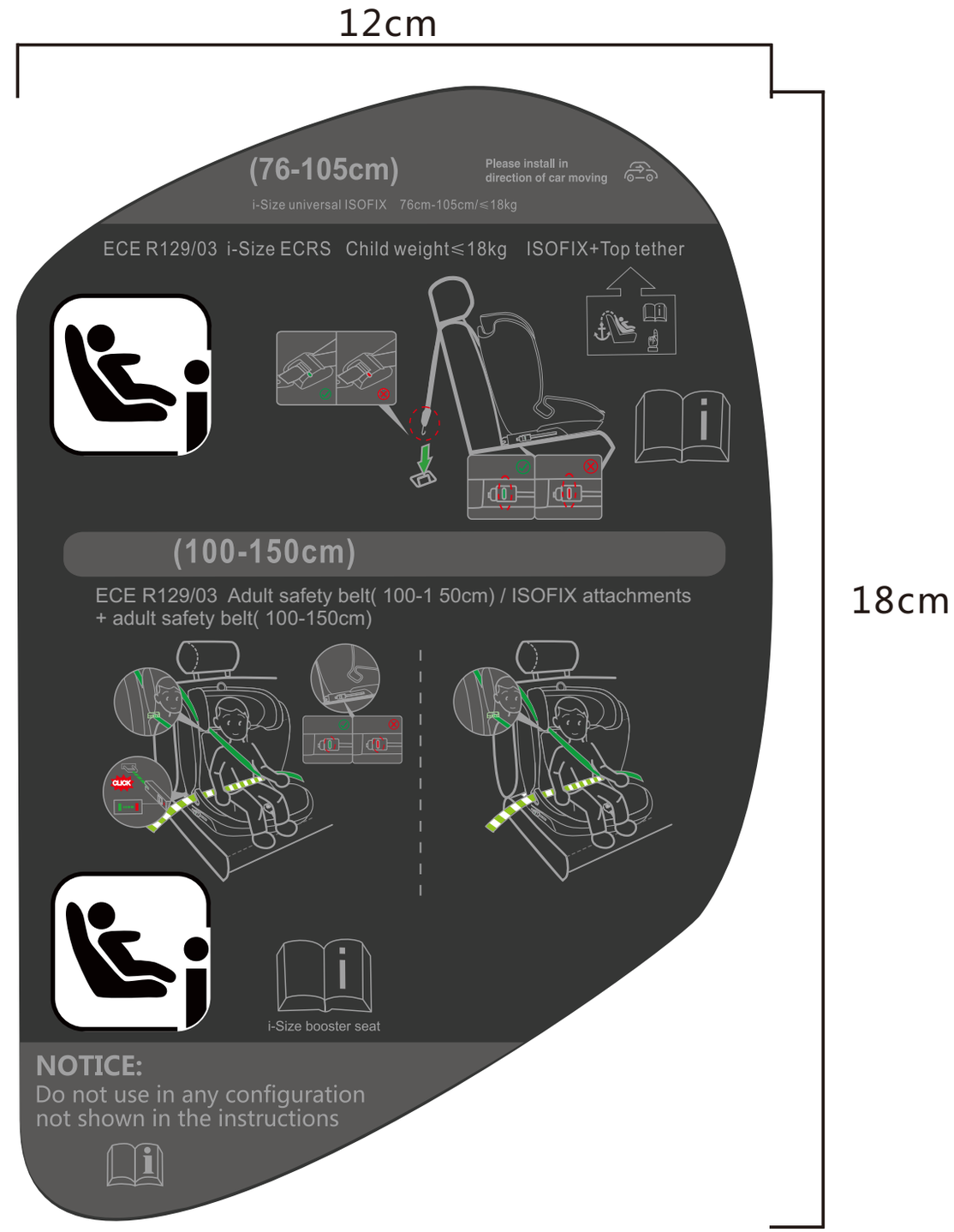

angelbaby

Ningbo Wegro Children Products Co.,Ltd.
2F Bldg.3,No.29, Lane 321,TongNing Road,
Jangbei District,315033, Ningbo, Zhejiang
Province, China(PRC)
Tel:+86- 574-87203690
nbwegro.com

Instruction Manual

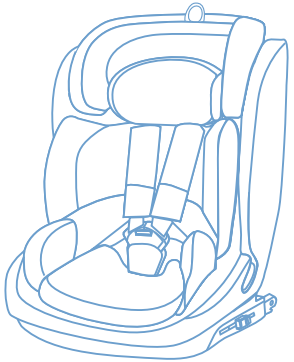

angelbaby

HEMERA

WG07 FIX

i-Size universal ISOFIX
76-105cm
i-Size Booster seat
100-150cm

The product has been approved according to the strictest European safety standards (R129/03)

Contents

Warranty 03-04
Use in the vehicle 05-06
Know your child seat 07-08
Setting the shoulder belt height 09
Setting the headrest height 10
Using the buckle 11
Adjust the harness..... 12
How to use the isofix connector 13
Forward facing installation(76-105cm) 14-16
Forward facing installation(100-150cm) 17-22
Unlock ISOFIX 23

Remove the cover 24
Maintenance 25
Service 26

Warranty

- The rigid items and plastic parts of an Enhanced Child Restraint System shall be so located and installed that they are not liable, during everyday use of the vehicle, to become trapped by a movable seat or in a door of the vehicle.
- Any straps holding the restraint to the vehicle should betight, any support leg should be in contact with the vehicle floor, any straps or impact shields restraining the child should be adjusted to the child's body, and straps should not be twisted.
- It is important to ensure that any lap strap is worn low down.
- The Enhanced Child Restraint System should be replaced when it has been subject to violent stresses in an accident.
- It is danger to make any alterations or additions to the device without the approval of the Type Approval Authority, and it is also danger not following closely the installation instructions provided by the Enhanced Child Restraint System manufacturer.
- Be sure that children are not left in their Enhanced Child Restraint System unattended .
- Be sure that any luggage or other objects liable to cause injuries in the event of a collision shall be properly secured .
- Be sure that the Enhanced Child Restraint System shall not be used without the cover.
- Be sure that the Enhanced Child Restraint System cover should not be replaced with any other than the one recommended by the manufacturer, because the cover constitutes an integral part of the restraint performance.

- Be referred to the vehicle manufacturer's handbook for the use of an "i-size Enhanced child Restraint System".
- The child restraint may not fit in all approved vehicles when used in stature range above 150 cm.

WARNING

IMPORTANT-DO NOT USE BEFORE THE CHILD'S AGE EXCEEDS 15 MONTHS(Refer to instruction)

ATTENTION:

Notice regarding i-Size category Enhanced Child Restraint Systems(76-105cm).
This is an i-Size Enhanced Child Restraint System.
It is approved according to UN Regulation No.129, for use in, i-Size compatible vehicle seating positions as indicated by vehicle manufacturers in the vehicle users' manual.
If in doubt, consult either the Enhanced Child Restraint System manufacturer or the retailer.

Notice regarding i-Size booster seat category Enhanced Child Restraint Systems(100- 150cm)
This is a i-Size booster seat Enhanced Child Restraint System.
Tit is approved according to UN Regulation No.129, for use primarily in " i-Size seating positions" as indicated by vehicle manufacturers in the vehicle user's manual.
Tif in doubt, consult either the Enhanced Child Restraint System manufacturer or the retailer.

Use in the vehicle

1.Product description:

DIRECTION	GROUP	INSTALLATION METHOD	TYPE
Forward facing	76-105	ISOFIX+Top Tether	I-Size
Forward facing	105-150	ISOFIX+ 3 point car belt	I-Size booster seat
Forward facing	105-150	3 point car belt	I-Size booster seat

2.Certification

...as a child safety seat installed in a vehicle

Angelbaby child safety seat	Tested and certified according to ECE R129		
	Stature	Forward	Forward
WG07FIX		76-105cm	100-150cm

* ECE= European Standard for Safety Equipment

The child safety seat has been designed, tested and certified according to the requirements of the European Standard for Child Safety Equipment(ECE R129/03).

WARNING

Never use this child restraint system in seating positions where an active frontal airbag is installed.

An active frontal airbag may cause death or seriously injury of your child in an accident.

Please read the instructions carefully and keep safely for future reference . There is an instructions compartment in the back of the child car seat for storage of the instructions manual.

You can use your child car seat as follows:

Know your child seat

01- Headrest

02- Shoulder strap belt guide

03- Backrest

04- Chest pad

05- Comfortable Cushion
(Suitable for 76-87cm)

06- Shoulder strap

07- Buckle

08- Crotch strap

09- Adjuster

10- Harness adjuster strap

11- Isofix insertion guides

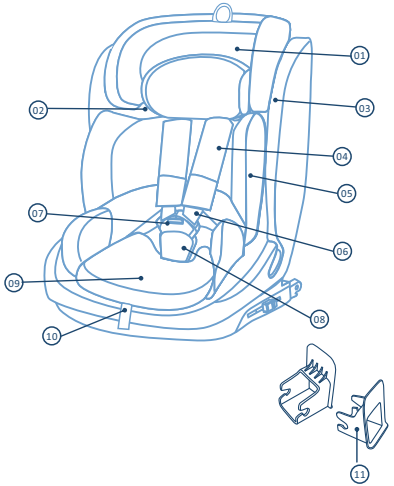

12- Headrest adjustable switch

13- Top tether

14- Pulling regulator

15- Isofix top-tether connector

16- Lab belt guide

17- Isofix unlock button

18- Isofix connector

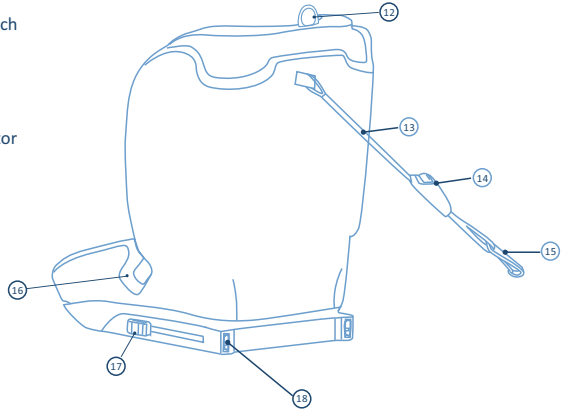

Setting the shoulder belt height

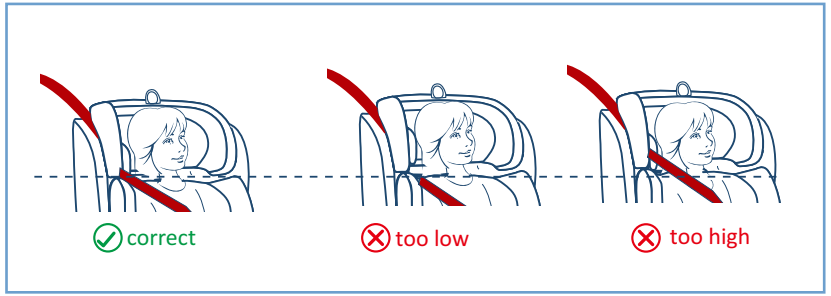

Check whether the shoulder belts are set at the right height for your child.

The shoulder belts should be fed into the belt slots that lie at shoulder height or just above.

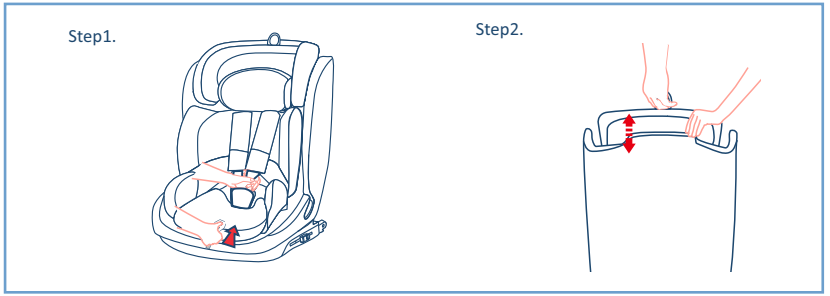

Step1. Loosen the harness .Press the adjuster button to release the harness with one hand,use another hand to pull out the shoulder straps outward.

Step2. Pull the headrest switch button upward and down ward to adjust the height of the harness and the headrest according to the child's height.

Using the buckle

Locking Method :

Align the left and right buckle tongues to one tongue and insert into the buckle until you hear a“Click”.

Unlocking Method:

You can press the red button of the buckle downwards,the two metal sections will be pop up.

Adjust the harness

angelbaby

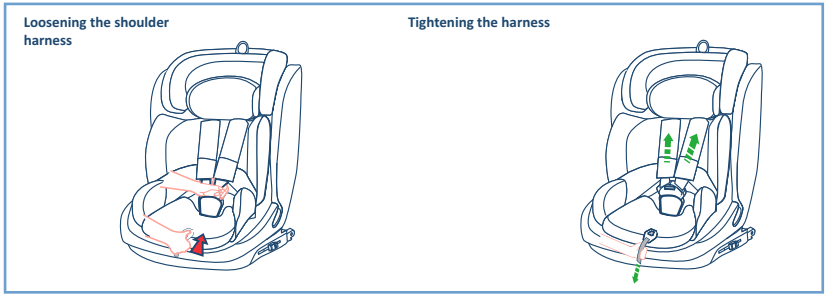

Loosening the shoulder harness

Press the adjuster button under the cover and at the same time pull both shoulder straps forward.

Tightening the harness

Pull the adjuster strap until the harness is fully tightened.

How to use the isofix connector

In order to lock the isofix connector to the anchorage points successfully, you can use isofix insertion guides.

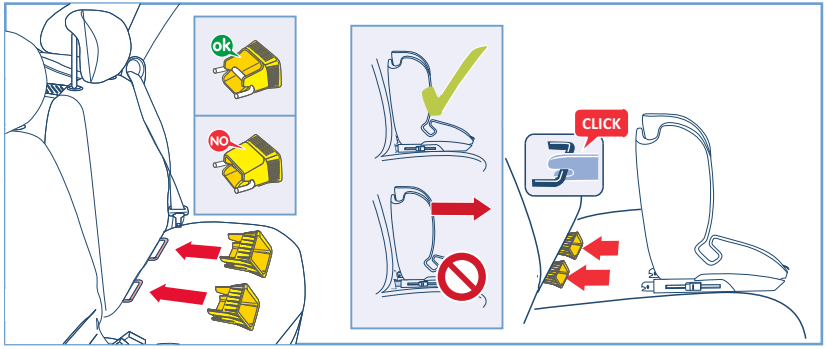

Locate the ISOFIX Anchorage points and place the isofix insertion guides over the two points.

Extend the ISOFIX Brackets and connect them to the Anchorage Points of the vehicle.

Forward facing installation(76-105cm)

angelbaby

Suitable for child's height form 76-105cm

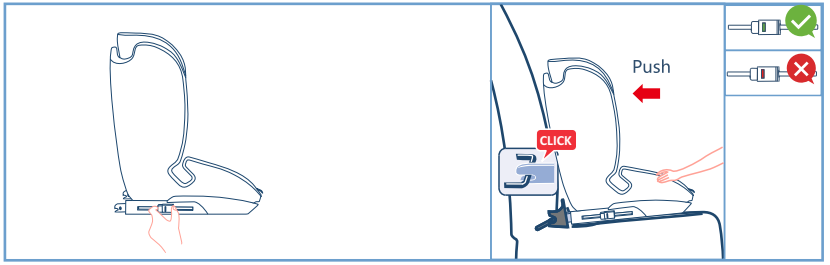

Press both isofix unlock button and push out isofix connector.

Find the vihicle isofix anchor, make sure the isofix connector attached the anchor correctly, meanwhile push the seat until you hear"CLICK"

Notice: Check the isofix unlock button if it shows green, make sure that installed firmly.(Green means locked correctly,Red means unclocked or not locked)

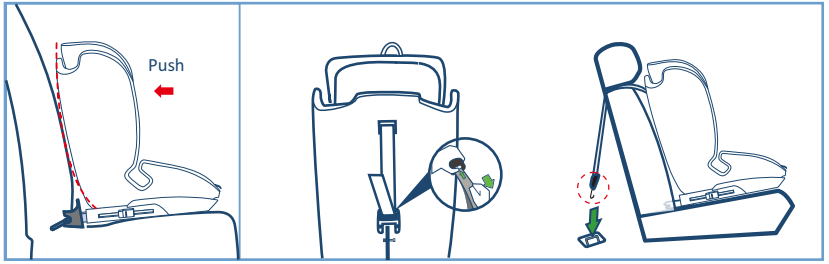

Push the child seat backrest until attached the vehicle backrest tightly.

Adjust the length of the top tether to the most suitable position.

Connect top tether with the fixing point on the car.

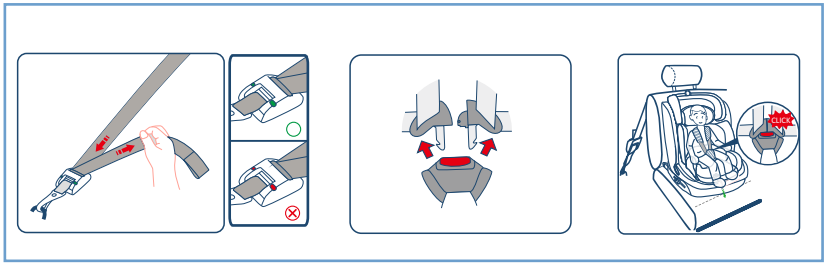

String the belt of top tether until the pulling regulator shows green.

Release the buckle.

Put the child into the safety car seat, align the left and right buckle tongues to one tongue and insert intothe buckle until you hear a “click”.

Forward facing installation(100-150cm)

It is suitable for the height 100-150cm, given to children about 3-12 years old.

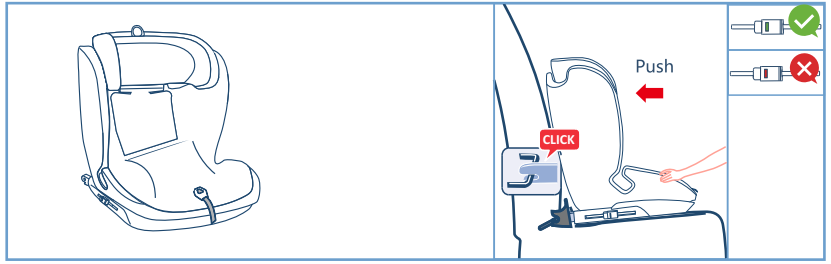

Hide the comfortable cushion and 5 point harness.

Installation method of child car seat.

Notice: When use as height 100-150cm , this seat can be installed by isofix+adult safety belt or only by adult safety belt.

Removing 5-Point Harness and Storage the Accessory Part

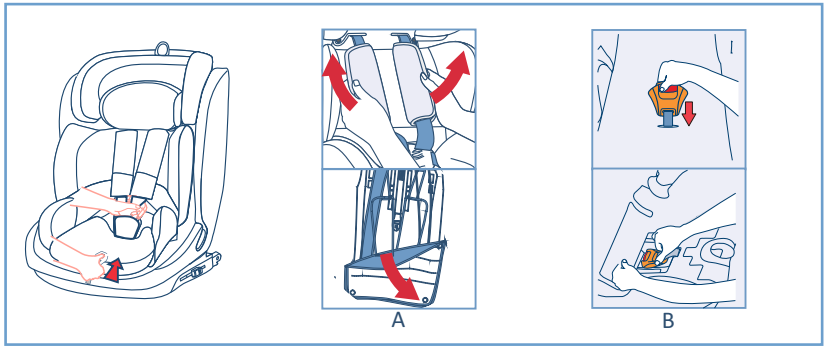

A. Open the flap on the back of the seat and stow the shoulder sections of the harness behind.

B. To store the 5-point safety harness away it needs to be fully loosened first. Press the red release button and undo the harness. Lift the cover under thecushion and store the buckle parts in the compartment.

Method 1: Installation adult safety belt(100-150cm)

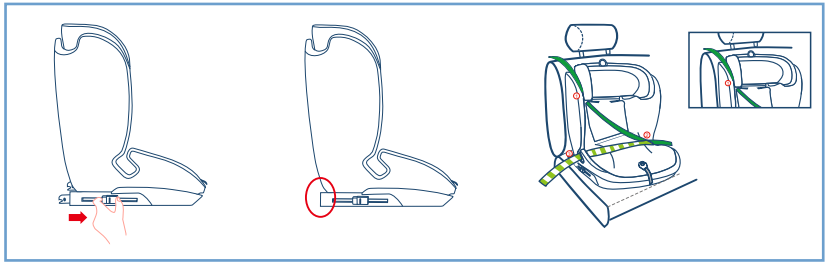

Hide the isofix in the booster.
Put the seat against the car seat

Follow the routine to install the baby car seat.

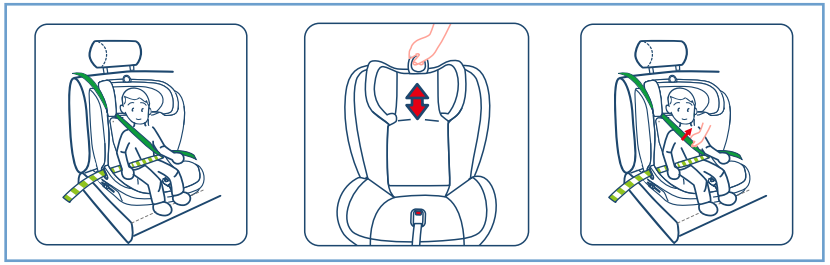

Securing the child
Put the child into the child car seat and follow routine.

Use the Headrest adjustable switch to adjust the height of the headrest according to the child's height.
The shoulder straps should be level with or just above the child s shoulders.

Fasten car seat belt and make sure, it is tight enough.

Method 2: Isofix attachments+adult safety belt(100-150cm)

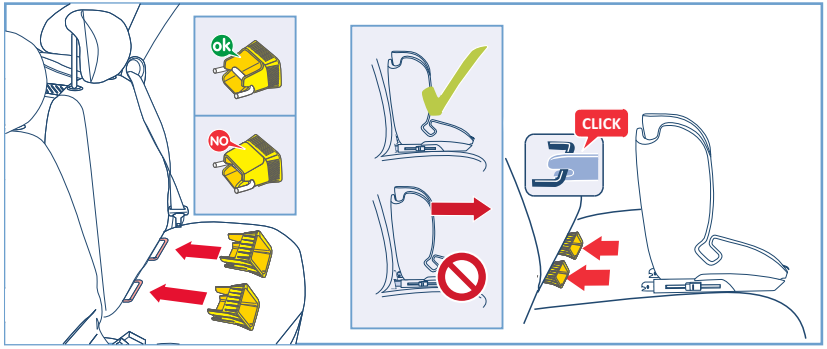

Locate the ISOFIX Anchorage points and place the isofix insertion guides over the two points.

Extend the ISOFIX Brackets and connect them to the Anchorage Points of the vehicle.

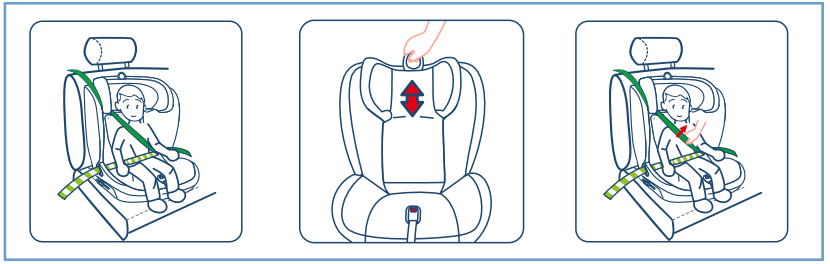

Securing the child

Put the child into the child car seat and follow routine.

Use the Headrest adjustable switch to adjust the height of the headrest according to the child s height.

The shoulder straps should be level with or just above the child s shoulders.

Fasten car seat belt and make sure, it is tight enough.

Unlock ISOFIX

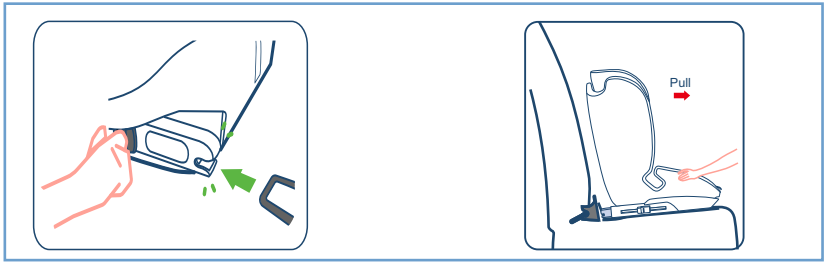

Press the isofix unlock button to release the isofix connector and take away the seat.

Remove the cover

angelbaby

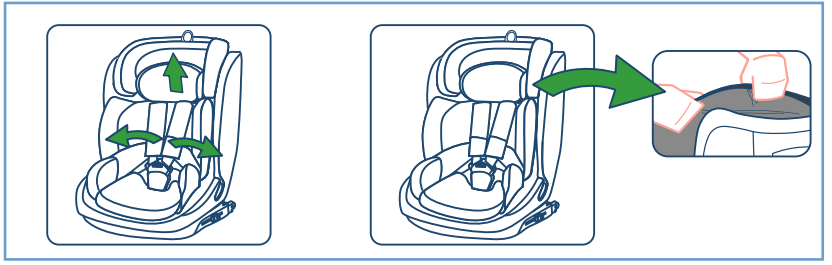

Adjust the headrest up to most highest position, take away the comfortable cushion. Then release the buckle to remove the chest pad.

Romove the headrest cover and seat cover carefully.

Maintenance

angelbaby

1. Washing

- The covers and the shoulder pads can be removed for washing under 30 clean water;
- Clean the shell using a damp cloth.
- Clean the buckle using a damp cloth.
- Remove off the harness system before washing by soap water.

2. Safety Self-Checking

- Checking harness system on time to make sure the safety, once find the broken, please contact manufacturer.
- If you have trouble on installation, please contact manufacturer.
- Checking car belt on time to make sure the safety, once find the broken, please contact manufacturer.

3. Handle after accident

After colliding by accident,please change baby car seat. Or contact manufacturer.

Service

angelbaby

Repair condition.

Repair service is according to normal operation. Under the quality problems by production, we can supply the following service

- Repair all life
- In 30days after buying, buyer can choose to return of goods,change goods or repair.Any questions, please contact manufacturer.

Any of below conditions, we can not repair by charge in 30days after sales.

- Repair by other people not be authorized by manufacturer
- Not installation,using and maintenance according to instruction
- Using other supplier spare parts cause quality problems
- Normal function problems by natural reason such as wet,abrasion,aging.

angelbaby

WG07 FIX

HEMERA 76-150cm

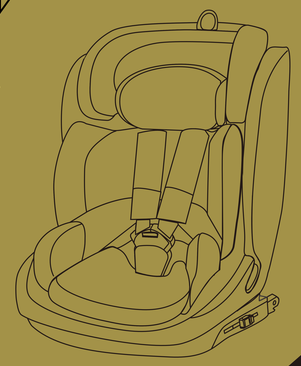

TESTED AND APPROVED
ECE R 129

WARNING

IMPORTANT-DO NOT USE BEFORE THE CHILD'S AGE EXCEEDS 15 MONTHS(Refer to instruction)

ATTENTION:

Notice regarding i-Size category Enhanced Child Restraint Systems(76-105cm)
This is an i-Size Enhanced Child Restraint System.
It is approved according to UN Regulation No. 129, for use in, i-Size compatible vehicle seating positions as indicated by vehicle manufacturers in the vehicle users' manual.
If in doubt, consult either the Enhanced Child Restraint System manufacturer or the retailer.

Notice regarding i-Size booster seat category Enhanced Child Restraint Systems(100-150cm)
This is a i-Size booster seat Enhanced Child Restraint System.
It is approved according to UN Regulation No. 129, for use primarily in " i-Size seating positions" as indicated by vehicle manufacturers in the vehicle user's manual.
If in doubt, consult either the Enhanced Child Restraint System manufacturer or the retailer.

angelbaby

WG07 FIX

HEMERA 76-150cm

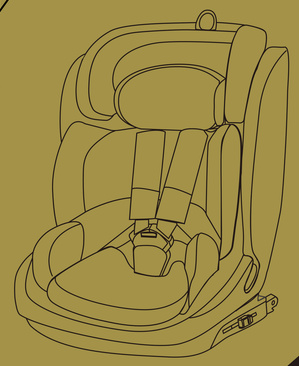

TESTED AND APPROVED
ECE R 129

MODEL: WG07 FIX	
G.W: 10kg	
N.W: 8.5kg	
QTY.: 1pc/Ctn	
Product Size: 47x44x56cm	
Carton Meas: 48x45x58cm	
C/N:	
COLOUR :	○
	○
	○

THIS SEAT IS AN ENHANCED CHILD RESTRAINT SYSTEM AND IS APPROVED ACCORDING TO ECE REGULATION R129.03

(READ INSTRUCTION MANUAL BEFORE USE)

Ningbo Wegro Children Products Co.,Ltd.
2F Bldg.3,No.29, Lane 321,TongNing Road,
Jangbei District,315033, Ningbo, Zhejiang
Province, China(PRC)
Tel:+86-574-87203690
nbwegro.com

Size：48x45x58cm