Wall-to-ceiling L-connector for recessed-mounted SMART Track, black color

TR/EU-2118-BK · Wall-to-ceiling L-connector for recessed-mounted SMART Track, black color

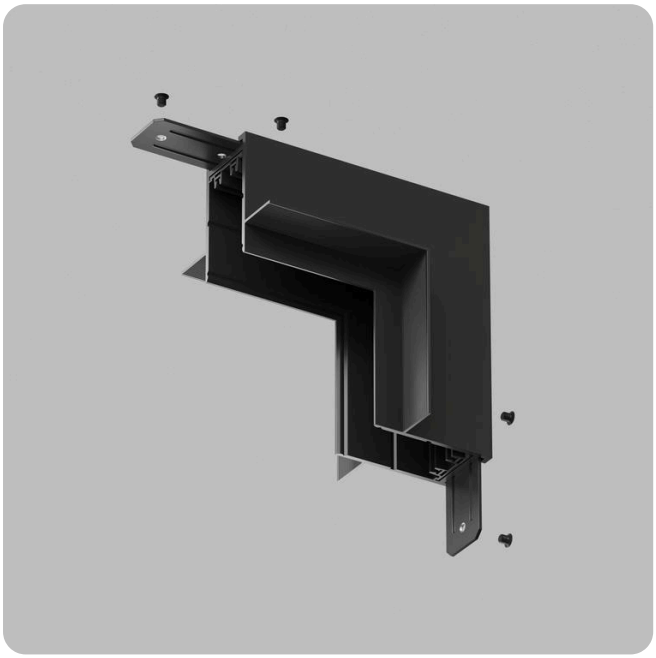

VOLTAGE 220 V	PROTECTION IP20
DIMENSIONS 118 × 74 × 70 mm	FINISH Black
WARRANTY 3 years	EAN 3831166002679

L-shaped mechanical connector for the SMART track, designed for recessed installation in drywall. It is intended for wall-to-ceiling transitions. The flexible electrical connector TR/EU-2103-BK is purchased separately. Two metal connecting plates for securing the track and corner element are included in the package.

OVERALL DIMENSIONS, MM

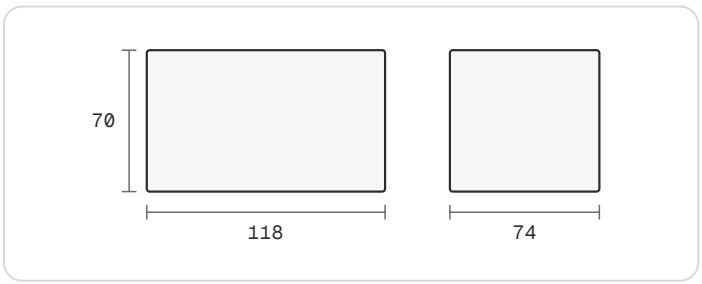

PART OF DENKIRS SMART

220 V, no driver

The track connects straight to the mains. No driver to size, no transformer to hide.

Four installation types

Surface, suspended, recessed in plasterboard — or SMART ONE for stretch ceilings.

Pairing, not wiring

Remotes, wall panels and the app connect over Bluetooth, Wi-Fi or Zigbee — no control cables to run.

TECHNICAL DATA

POWER & CONTROL

Voltage	220 V

DIMENSIONS

Length	118 mm
Width	74 mm
Height	70 mm

BUILD & ORDER

Finish	Black
Material	Aluminum
Protection	IP20
Warranty	3 years
Article	TR/EU-2118-BK
EAN barcode	3831166002679
Units per box	50 pcs